KCT Zero-Phase Current Transformer

KCT 零序电流互感器



技术数据 Technical Data

额定频率 Rated Frequency	50/60HZ	
准确值 Accuracy Class	5P、10P（外接电阻时） (When an external resistor in connected)	
额定匝数比 Rated turns ratio	1/210(可按用户需求定制) Can be customized	
剩余电流输入/感应输出电压参数 Residual current input / output voltage sensing parameters	零相（初级/次级） Zero Phase(Primary/Secodary)	额定电阻负荷 Rated Resistive Burden
	300mA/80mV	56Ω (KCT内带) Installed in KCT
	3A/80mV	5.6Ω (外接,在KLR523内) External connection, installed in KLR523
	30A/80mV	0.5Ω (外接,在KLR523内) External connection, installed in KLR523
额定一次电流 Rated primary current	0.3A	
额定准确限值一次电流 Rated accuracy limit primary current	3A	
准确限值系数 Accuracy limit factor ALF	10	
设备最高电压 Highest voltage for equipment	0.72kV	
额定工频耐受电压 Rated power-frequency withstand voltage	3kV	
工作温度 Operating Temperature	-25 ~ +40℃	

尺寸Dimensions

尺寸Dimension(mm)	KCT40	KCT55	KCT80
A	40	55	80
B	79	126	120.5
C	97	151	138
D	3.5	4	3.5
E	35	37	35
F	53.5	100	94.5
G	17.5	14	17.5
H	17.5	19	17.5
I	32	44	37
J	10	12.5	10

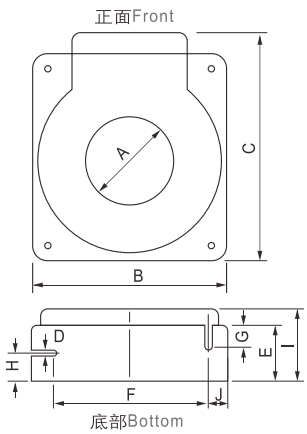

订购信息 Ordering Information

型号 Model	内径 Inner Dia	穿心电缆的最大电流 Maximum curent feed through cable	安装螺纹规格 Mounting thread size
KCT40	40mm	250A	M3.5
KCT55	55mm	400A	M4
KCT80	80mm	630A	M3.5