KRIPAL

浙江科瑞普电气有限公司
ZHEJIANG KRIPAL ELECTRIC CO.,LTD.

KRIPAL

Since 1992

国家级专精特新"小巨人"企业

国家高新技术企业

浙江省专利示范企业

省级高新技术企业研究开发中心

中国国际商会温州商会理事单位

公司简介 | COMPANY PROFILE

浙江科瑞普电气有限公司是一家专业从事研发、生产、销售低压电气、防水电气和新能源产品的国家级专精特新"小巨人"企业、国家高新技术企业。

公司成立于1992年，经过多年的蓬勃发展，现已逐渐发展成为中国颇具影响力的电气制造商。

公司建有遍布全球的销售体系和服务网络，产品出口欧洲、澳洲、美洲、非洲、大洋洲、东南亚和港澳台地区，并在当地具有良好的品牌效应，并获得浙江出口名牌企业称号。公司现有厂房面积60000平方米，员工600余人，其中高级工程师10+人，专业技术人员30余人，高级管理人员30余人。

产品获得欧盟CE、美国UL、德国TUV、荷兰KEMA、瑞典SEMKO、澳大利亚SAA、德国VDE及欧盟RoHs等国际认证，以及3C国家认证和CB国际电子产品全球互认体系，通过ISO9001质量管理体系、ISO14001环境管理体系、ISO45001职业健康与安全管理体系、ISO5001能源管理体系的认证。

公司与国内外科研机构广泛合作，引进国外先进的制造检测设备，先后开发出具有自主知识产权的产品100余种，多项产品已获国家发明及实用新型专利，成为省级技术研发中心和浙江省专利示范企业。

公司坚持"科学管理、自主创新、协调合作、品牌至上"的企业方针，信守"德行天下"的承诺，践行"与客户合作共赢、与员工共同富裕、为股东创造效益、为社会贡献和谐"的核心价值观，为努力实现专业电气世界品牌梦的使命而奋斗。

Zhejiang KRIPAL Electric Co., Ltd is one of the national new high-tech enterprises integrated of researching, producing and selling water-proof electric, low-voltage electric and new energy electric products.

Established in 1992, KRIPAL now is gradually becoming the influential electric manufacturer in China after many years well development.With a great brand effect, KRIPAL has the completed sales and service network with its products been exported to all over the world like Europe. Australia. American. Africa. Oceania. South east of Asia, and district of HongKong, Macaw and Taiwan.KRIPAL is awarded the title of "Famous Export Brand".

KRIPAL now has the factory area 60000 m2 and workers more than 600, including over 10 senior engineers, 30 professional technicists and 30 senior executives. Products pass the certification of CE, CB, UL, VDE, TUV, KEMA, SAA, SEMKO, ROHS, and China CCC as well as quality management system such as ISO9001,ISO14001,ISO45001,ISO5001.

Cooperated with domestic and foreign R&D institutions, KRIPAL, successively developed more than 100 independent intellectual properties; some of them were successfully awarded the national patent for invention and utility models as its well performance. KRIPAL now has been selected as provincial technical research and development center and patent demonstration enterprise by government.

KRIPAL always adheres to the enterprise principle of "Scientific management, independent Innovation, Coordinating Collaboration and Cultural Brand", keep faith of "moral first" and fulfill the core value of "double-win cooperation with customers, creating profit for company owners, getting rich together with workers, building harmony for society" and fight for the mission of"make the dream of world famous electrical brand come true".

认证证书 CERTIFICATE

KRIPAL

努力实现专业电气世界品牌梦

目录 Contents

KLR332/732 Earth Leakage Relay

KLR332/732 漏电继电器

特征Features

- 数字式接地保护继电器
- 可编程电流灵敏度和延时继电器
- 嵌入式数字谐波滤波器
- 检测没有连接到电流互感器
- 实时漏电显示
- 继电器跳闸指示灯
- 跳闸时的漏电电流记录
- 符合IEC60755标准
- Numerical earth leakage relay
- Programmable current sensitivity and time delay
- Built-in digital harmonic filter
- Detection of no connection to current transformer
- Real-time leakage current display
- Relay tripped indicator
- Leakage current recording when tripped
- IEC60755 standard

技术数据 Technical Data

整定值 Settings	
灵敏度调整 Sensitivity adjustment	范围1的阶跃顺序为 0.03A→0.05A→0.10A→0.15A Range 1 is stepping from 0.03A-0.05A-0.10A-0.15A
	范围2的阶跃顺序为 0.20A到0.75A，阶跃单位为0.05A Range 2 is from 0.02A to 0.75A in step of 0.05A
	范围3的阶跃顺序为 0.80A到3.00A，阶跃单位为0.05A Range 3 is from 0.80A to 3.00A in step of 0.05A
延时调整 Delay time adjustment	从0.05秒到3.00秒，阶跃单位为0.05秒 From 0.05 to 3.00 sec in step of 0.05 sec
	从3.00秒到10.0秒，阶跃单位为0.50秒 From 3.00 to 10.0 sec in step of 0.50 sec
触头 Contacts	
触头配置 Contact arrangement	切换 Change-over
触头容量 Contact rating	6A, 250VAC(cos ϕ = 1)用于跳闸触头 6A,250V AC (cosφ =1) for tripping contact
	5A, 250VAC(cos ϕ = 1)用于安全触头* 5A,250V AC (cosφ =1) for safety contact *
	5A, 250VAC(cos ϕ = 1)用于50%故障前触头** 5A,250V AC (cosφ =1) for 50% pre-fault contact **
触头材料 Contact material	银合金 Silver alloy
操动时间 Operating time	最大15毫秒 15 ms max.
预期电寿命 Expected electrical life	在额定电流下为100,000 次操动 100,000 operations at rated current
预期机械寿命 Expected mechanical life	$5x10^6$ 次操动 5× 10^6operations
认证 Approval	UL/CSA, VDE, TUV, SEMKO UL/CSA, VDE, TUV, SEMKO
输入 Input	
远程试验/复位输入 Remote Test/ Reset Inputs	常开干触头* N.O. dry contact *
辅助电源 Auxiliary supply	
电源电压 Supply voltage	198-265V 交流 198~265V AC
	90-120V交流 90~120V AC
电源频率 Rated frequency	50或60Hz 50 or 60 Hz
VA额定值 VA rating	正常值为 3VA 3 VA typical
指示灯 Indicators	
辅助电源 Auxiliary supply	绿色LED指示灯 Green LED
延时 Time delay	红色LED指示灯 Red LED
跳闸 Trip	7-段LED和红色LED指示灯 7-segment LED and red LED
远程漏电 Real-time leakage current	7-段LED 7-segment LED
零相位电流互感器 Zero-phase current transformer	
使用KCT系列电流互感器来操动 To operate with KCT series of current transformer	
机械 Mechanical	
安装 Mounting method	面板安装、DIN导轨安装、螺丝安装 Panel mounted, DIN rail mounted, Screws mounted
正面面板 Front panel	标准DIN 96毫米×96毫米 Standard DIN 96mm×96mm
近似重量 Weight	0.8千克(不包括KCT) 0.8kg (excluding KCT)

**只适用KLR332E/732E系列 ＊＊Applicable to KLR332E/732E series only
*只适用KLR332E系列 ＊Applicable to KLR332E series only

KLR332/732 Earth Leakage Relay

KLR332/732 漏电继电器

典型应用图 Typical Application Diagram

KLR332

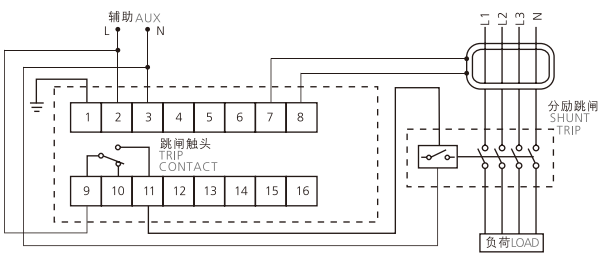

KLR732

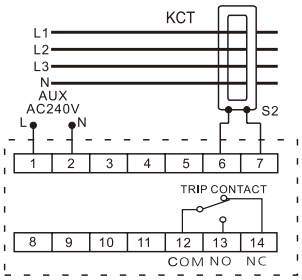

KLR732T

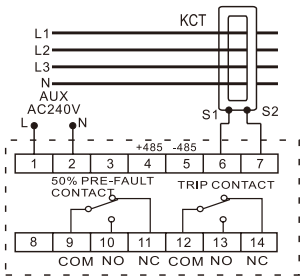

KLR332E

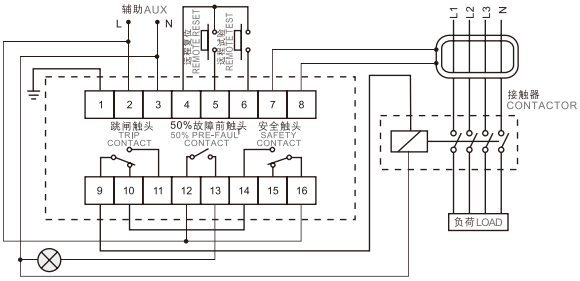

KLR732E

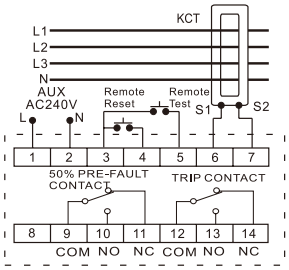

KLR732Z

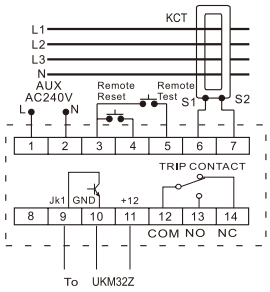

仅KLR332E具有的特征 Features for KLR332E only

- 50%故障前输出触头
- 主动安全输出触头
- 远程试验和远程复位功能

- 50% of the pre-fault output contacts
- Active safety output contacts
- Remote testing and remote reset functions

外壳尺寸 Case Dimensions

KLR332

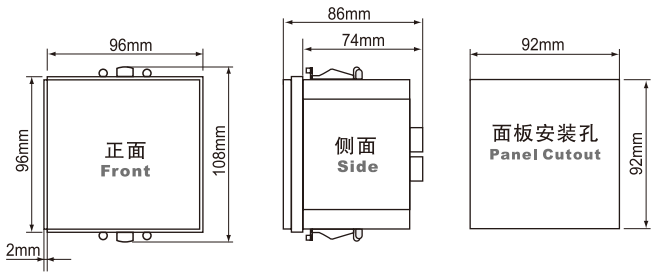

KLR732

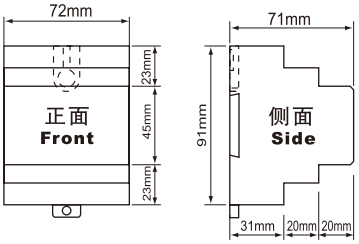

订购信息 Ordering Information

型号 Model	品名 Description
KLR332/732	带240V交流，50/60Hz电源 With 240 VAC, 50/60Hz power supply
KLR332/732-110	带110V交流，50/60Hz电源 With 110 VAC, 50/60Hz power supply
KLR332E/732E	带240V交流，50/60Hz电源 With 240 VAC, 50/60Hz power supply
KLR332E/732E-110	带110V交流，50/60Hz电源 With 110 VAC, 50/60Hz power supply
KLR332D/732D	带240V交流，50/60Hz电源 With 240 VAC, 50/60Hz power supply
KLR332D/732D-110	带110V交流，50/60Hz电源 With 110 VAC, 50/60Hz power supply
KLR332T/732T	带240V交流，50/60Hz电源 With 240 VAC, 50/60Hz power supply
KLR332T/732T-110	带110V交流，50/60Hz电源 With 110 VAC, 50/60Hz power supply
KLR332Z/732Z	带240V交流，50/60Hz电源 With 240 VAC, 50/60Hz power supply
KLR332Z/732Z-110	带110V交流，50/60Hz电源 With 110 VAC, 50/60Hz power supply

KLR333/733 Reclosing Earth Leakage Relay

KLR333/733 重合闸漏电继电器

特征Features

- 数字式重合闸接地保护继电器
- 可编程电流灵敏度和延时继电器
- 重合闸次数可编程
- 重合延时可编程
- 自动复位时间可编程
- 嵌入式数字谐波滤波器
- 检没有连接到电流互感器
- 外部和内部复位干触头输入
- 跳闸触头输出
- 报警输出
- 实时漏电显示
- 继电器跳闸指示灯
- 跳闸时的漏电电流记录
- 符合IEC60755标准

- Numerical self-reclosing earth leakage relay
- Programmable current sensitivity and time delay
- Programmable number of reclosing
- Programmable time delay for reclosing
- Programmable automatic reset time
- Built-in digital harmonic filter
- Detecti on of no connection to current transformer
- External test and external reset dry contact inputs
- Tripping contact output
- Alarm output
- Real-time leakage current display
- Relay tripped indicator
- Leakage current recording when tripped
- IEC60755 standard

技术数据 Technical Data

整定值 Settings	
灵敏度调整 Sensitivity adjustment	范围1的阶跃顺序为 0.03A→0.05A→0.10A→0.15A Range 1 is stepping from 0.03A-0.05A-0.10A-0.15A
	范围2的阶跃顺序为 0.20A到0.75A，阶跃单位为0.05A Range 2 is from 0.20A to 0.75 A in step of 0.05A
	范围3的阶跃顺序为 0.80A到3.00A，阶跃单位为0.05A Range 3 is from 0.80A to 3.00 A in step of 0.05A
延时调整 Delay time adjustment	从0.05秒到3.00秒，阶跃单位为0.05秒 From 0.05 to 3.00 sec in step of 0.05 sec
	从3.00秒到10.0秒，阶跃单位为0.05秒 From 3.00 to 10.0 sec in step of 0.50 sec
自合闸次数 Number of self-reclosing	从1次到100次, 阶跃单位为1 From 1 to 100 times in step of 1
重合闸延时 Reclosing time delay	从1秒到999秒, 阶跃单位为1秒 From 1 to 999 sec in step of 1 sec
自动复位时间 Automatic reset time	从1分到999分, 阶跃单位为1分钟 From 1 to 999 min in step of 1 min
触头 Contacts	
触头配置 Contact arrangement	切换 Change-over
触头容量 Contact rating	6A, 250VAC(cos ϕ = 1)用于跳闸触头 6A,250V AC (cosφ =1) for tripping contact
	5A, 250VAC(cos ϕ = 1)用于报警触头 5A,250V AC (cosφ =1) for alarm contact
触头材料 Contact material	银合金 Silver alloy
操动时间 Operating time	最大15毫秒 15 ms max.
预期电寿命 Expected electrical life	在额定电流下为100,000 次操动 100,000 operations at rated current
预期机械寿命 Expected mechanical life	$5x10^6$ 次操动 5×10^6 operations
认证 Approval	UL/CSA, VDE, TUV, SEMKO UL/CSA, VDE, TUV, SEMKO
输入 Input	
远程试验/复位输入 Remote Test/ Reset Inputs	常开干触头* N.O. dry contact
辅助电源 Auxiliary supply	
电源电压 Supply voltage	198-265V 交流 198~265V AC
	90-120V 交流 90~120V AC
电源频率 Rated frequency	50或60Hz 50 or 60 Hz
VA额定值 VA rating	正常值为 3VA 3 VA typical
指示灯 Indicators	
辅助电源 Auxiliary supply	绿色LED指示灯 Green LED
延时 Time delay	红色LED指示灯 Red LED
跳闸 Trip	7−段LED和红色LED指示灯 7-segment LED and red LED
实时泄漏电流 Real-time leakage current	7−段LED 7-segment LED
零相位电流互感器 Zero-phase current transformer	
使用KCT系列电流互感器来操动 To operate with KCT series of current transformer	
机械 Mechanical	
安装 Mounting method	面板安装、DIN导轨安装、螺丝安装 Panel mounted, DIN rail mounted, Screws mounted
正面面板 Front panel	标准DIN 96毫米×96毫米 Standard DIN 96mm× 96mm
重量 Weight	0.8千克(不包括KCT) 0.8kg (excluding KCT)

KLR333/733 Reclosing Earth Leakage Relay

KLR333/733 重合闸漏电继电器

典型应用图 Typical Application Diagram

KLR333

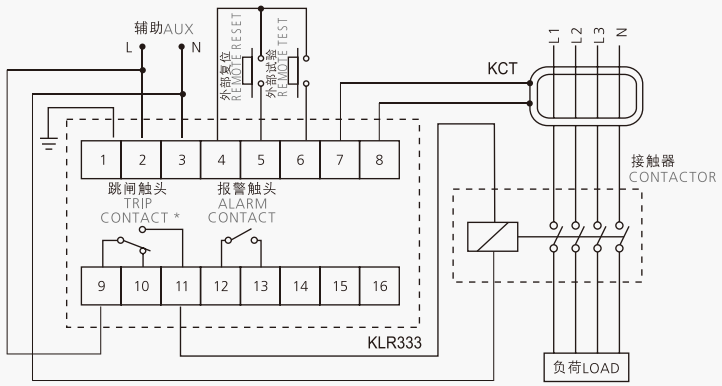

*线路接通（触头9-11闭合）

当继电器在正常通电状态测量漏电电流小于灵敏度I△n设置时，这种接法只适用于KLR333。

* The trip contact is activated (terminal 9-11 closed) when the relay is in normal power-up condition with the measured leakage current less than the sensitivity setting, I△n This logic applicable to KLR333 only.

KLR733

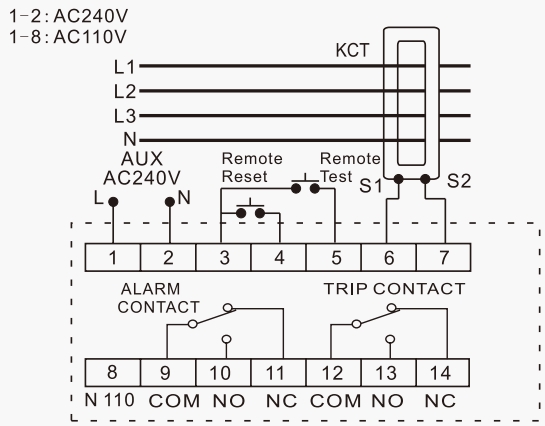

KLR733T

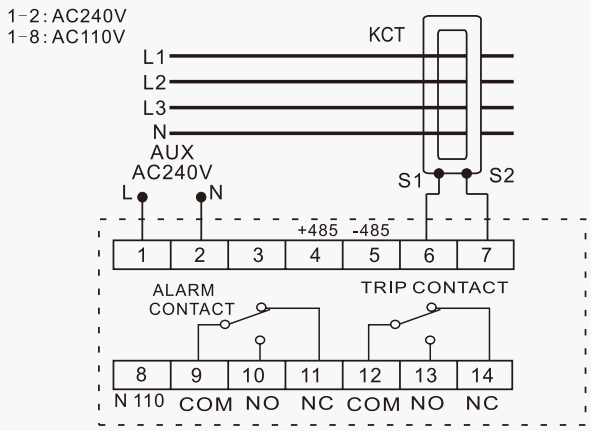

外壳尺寸Case Dimensions

KLR333

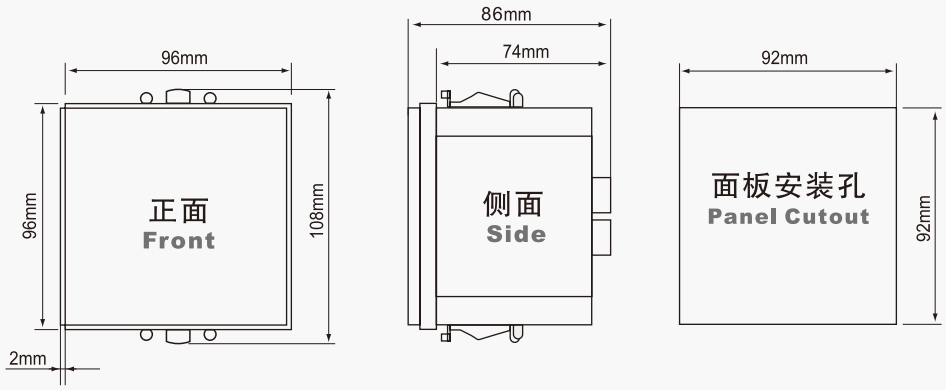

KLR333/733 Reclosing Earth Leakage Relay

KLR333/733 重合闸漏电继电器

KLR733

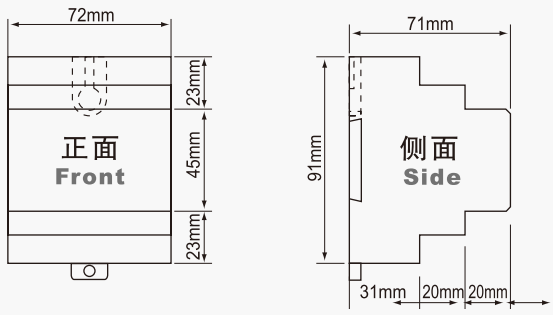

定购信息 Ordering Information

型号 Model	品名 Description	
KLR333/733	带240V交流，50/60Hz电源	With 240 VAC, 50/60Hz power supply
KLR333/733-110	带110V交流，50/60Hz电源	With 110 VAC, 50/60Hz power supply
KLR333T/733T	带240V交流，50/60Hz电源	With 240 VAC, 50/60Hz power supply
KLR333T/733T-110	带110V交流，50/60Hz	With 110 VAC, 50/60Hz power supply

KLR121 Earth Leakage Relay

KLR121 漏电继电器

特征Features

- 锁定型和非锁定型跳闸触头
- 跳闸启动指示灯
- 继电器跳闸指示灯
- 检测没有连接到电流互感器
- 极强的抗电干扰能力

- Both latching and non-latching type of tripping contacts
- Trip starting indicator
- Relay tripped indicator
- Detection of no connection to current transformer for extra safety
- High immunity to electrical interference

技术数据 Technical Data

整定值 Settings	
灵敏度调整 Sensitivity adjustment	0.1A到1.0A 0.1 to 1.0 A
延时调整 Delay time adjustment	从0.1秒到3.0秒 0.1 sec to 3.0 sec
触头 Contacts	
触头配置 Contact arrangement	1 x 锁定型，带手动复位 1× latching type with manual reset
	1 x 非锁定型，带自动复位 1× non-latching type with auto reset
	有常开和常闭触头 Both NC and NO contacts available
触头容量 Contact rating	6A, 250VAC(cos ϕ = 1)触头额定值 6A,250V AC (cosφ =1) contact rating
触头材料 Contact material	银合金 Silver alloy
操动时间 Operating time	最大15毫秒 15 ms max.
预期电寿命 Expected electrical life	在额定电流下为100,000 次操动 100,000 operations at rated current
预期机械寿命 Expected mechanical life	$5x10^6$ 次操动 5×10^6 operations
认证 Approval	UL/CSA, VDE, TUV, SEMKO UL/CSA, VDE, TUV, SEMKO
辅助电源 Auxiliary supply	
电源电压 Supply voltage	198-265V 交流 198~265V AC
	90-120V 交流 90~120V AC
电源频率 Rated frequency	50或60Hz 50 or 60 Hz
VA额定值 VA rating	正常值为3VA 3 VA typical
指示灯 Indicators	
辅助电源 Auxiliary supply	绿色LED指示灯 Green LED
延时 Time delay	红色LED指示灯 Red LED
跳闸 Trip	红色LED指示灯 Red LED
性能 Performance	
精度调整范围 Adjustable accuracy	小于±5% Less than ± 5%.
可重复性 Repeatability	满量程时小于0.5% Less than 0.5% of full scale.
零相位电流互感器 Zero-phase current transformer	
使用KCT系列电流互感器来操动 To operate with KCT series of current transformer	
机械 Mechanical	
安装 Mounting method	面板安装 Panel mounted
正面面板 Front panel	标准DIN 96毫米×96毫米 Standard DIN 96mm× 96mm
重量 Weight	0.8千克(不包括KCT) 0.8kg (excluding KCT)

KLR121 Earth Leakage Relay

KLR121 漏电继电器

典型应用图 Typical Application Diagram

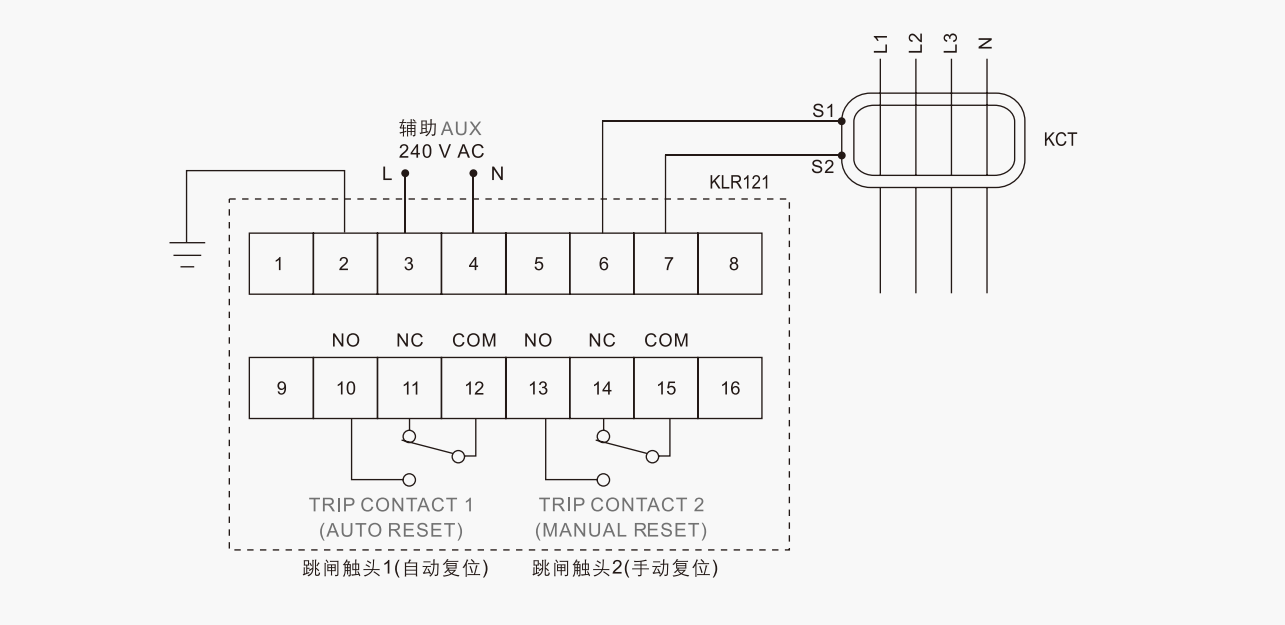

外壳尺寸 Case Dimensions

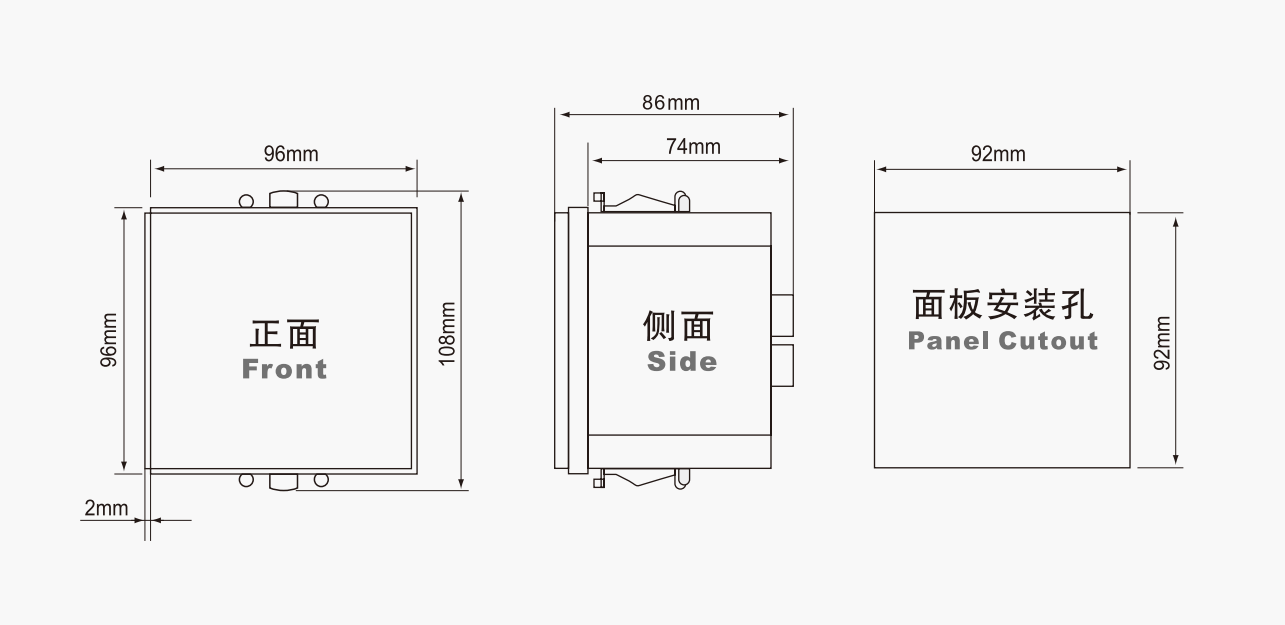

订购信息 Ordering Information

型号 Model	品名 Description	
KLR121	带240V交流，50/60Hz电源	With 240 VAC, 50/60 Hz power supply
KLR121-110	带110V交流，50/60Hz电源	With 110 VAC, 50/60 Hz power supply

KLR122 Earth Leakage Relay

KLR122 漏电继电器

功能 Functions

- 锁定型和非锁定型跳闸触头
- 跳闸启动指示灯
- 继电器跳闸指示灯
- 漏电电平指示灯
- 检测没有为更加安全而连接到电流互感器
- 极强的抗电干扰能力
- 远程复位和远程试验功能
- Both latching and non-latching type of tripping contacts
- Trip starting indicator
- Relay tripped indicator
- Earth leakage level indicators
- Detection of no connection to current transformer for extra safety
- High immunity to electrical interference
- Remote reset and remote test functions

技术数据Technical Data

整定值 Settings	
灵敏度调整 Sensitivity adjustment	0.1A到1.0A 0.1 to 1.0 A
延时调整 Delay time adjustment	从0.1秒到3.0秒 0.1 sec to 3.0 sec
触头 Contacts	
触头配置 Contact arrangement	1 x 锁定型，带手动复位 1× latching type with manual reset
	1 x 非锁定型，带自动复位 1× non-latching type with auto reset
	有常开和常闭触头 Both NC and NO contacts available
触头容量 Contact rating	6A, 250VAC(cos ϕ = 1)触头额定值 6A,250V AC (cosφ =1) contact rating
触头材料 Contact material	银合金 Silver alloy
操动时间 Operating time	最大15毫秒 15 ms max.
预期电寿命 Expected electrical life	在额定电流下为100,000 次操动 100,000 operations at rated current
预期机械寿命 Expected mechanical life	$5x10^6$ 次操动 5×10^6 operations
认证 Approval	UL/CSA, VDE, TUV, SEMKO UL/CSA, VDE, TUV, SEMKO
输入 Inputs	
远程试验/复位 Remote Test/ Reset Inputs	常开干触头 N.O. dry contact
辅助电源 Auxiliary Supply	198-265V交流 198~265V AC
电源电压 Supply voltage	90-120V交流 90~120V AC
电源频率 Rated frequency	50或60Hz 50 or 60 Hz
VA额定值 VA rating	正常值为3VA 3 VA typical
指示灯 Indicators	
辅助电源 Auxiliary supply	绿色LED指示灯 Green LED
延时 Time delay	红色LED指示灯 Red LED
跳闸 Trip	红色LED指示灯 Red LED
性能 Performance	
精度调整范围 Adjustable accuracy	小于±5% Less than ± 5%.
可重复性 Repeatability	满量程时小于0.5% Less than 0.5% of full scale.
零相位电流互感器 Zero-phase current transformer	
使用KCT系列电流互感器来操动 To operate with KCT series of current transformer	
机械 Mechanical	
安装 Mounting method	面板安装 Panel mounted
正面面板 Front panel	标准DIN 96毫米×96毫米 Standard DIN 96mm× 96mm
重量 Weight	0.8千克(不包括KCT) 0.8kg (excluding KCT)

KLR122 Earth Leakage Relay

KLR122 漏电继电器

典型应用图Typical Application Diagram

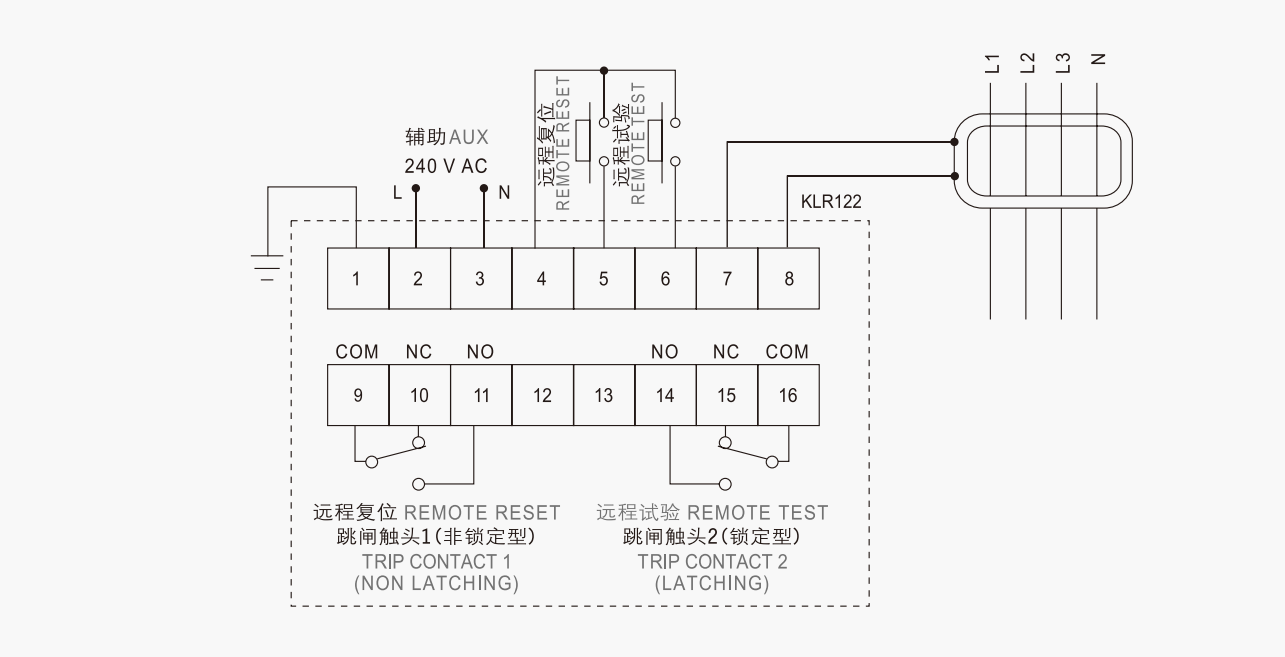

外壳尺寸Case Dimensions

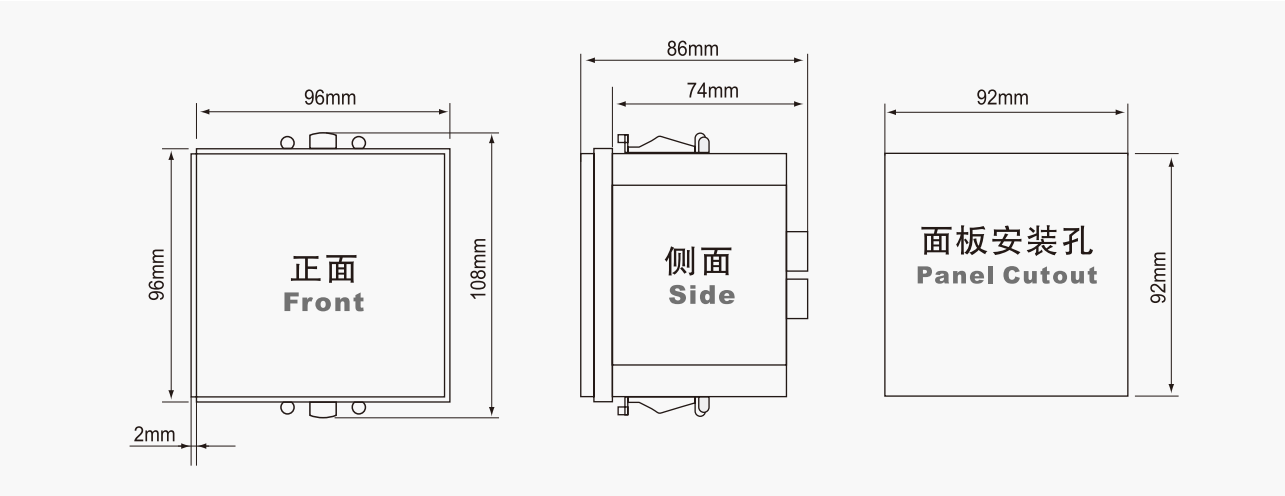

订购信息Ordering Information

型号 Model	品名 Description	
KLR122	带240V交流，50/60Hz电源	With 240 V AC, 50/60 Hz power supply
KLR122-110	带110V交流，50/60Hz电源	With 110 V AC, 50/60 Hz power supply

KLR523/623/525/625Earth Leakage Relay

KLR523/623/525/625 漏电继电器

功能Functions

- 25个可选择灵敏度整定值: 30mA到30A
- 9个可选择延时:0毫秒到3秒
- 漏电电平指示灯
- 检测没有连接到KCT
- 继电器跳闸指示灯
- 跳闸启动指示灯
- 防无故跳闸保护

- 25 selectable sensitivity settings: 30 mA to 30 A
- 9 selectable time delays: 0 ms to 3s
- Earth leakage level indicators
- Detection of no connection to KCT
- Relay tripped indicator
- Trip starting indicator
- Protected against nuisance tripping

仅KLR523E具有的特征*

Features for KLR523E only*

- 50%故障前输出触头
- 远程试验和远程复位功能

- 50% pre-fault output contact
- Remote test and remote reset functions

技术数据Technical Data

整定值 Settings	
灵敏度调整 Sensitivity adjustment	30mA,50mA,75mA,100mA,125mA,150mA,200mA,250mA,300mA,500mA,750mA, 1A, 1.25A, 1.5A, 2A, 2.5A, 3A, 5A, 7.5A, 10A, 12.5A, 15A, 20A, 25A, 30A
精度 Accuracy	+0% 到 -15%
延时整定值 Time delay setting	瞬态, 50ms, 100ms，150ms，250ms，350ms，500ms，1s，3s。
精度 Accuracy	±5%
辅助电源 Auxiliary supply	
电源电压 Supply voltage	110V ±10% 交流或240V ±10% 交流 110V AC ±10% or 240V
	90-120V 交流 90-120VAC
电源频率 Frequency	50或60Hz 50 Hz or 60 Hz
VA额定值 VA rating	小于3VA Less than 3 VA
指示灯 Indicators	
辅助电源 Auxiliary supply	绿色LED指示灯 Green LED
延时 Time delay	红色LED指示灯 Red LED
跳闸 Trip	红色LED指示灯 Red LED
漏电流 Leakage current*	5个红色指示灯来显示漏电电平 5 red LED for leakage levels
输入 Inputs	
远程试验/复位输入* Remote test/ reset inputs	常开干触头* N.O. dry contact*
传感器 Sensor	KCT KCT
输出 Outputs	
触头（跳闸/50%故障前*） Contacts (Trip / 50% pre-fault*)	
触头配置 Contact arrangement	切换 Change over
触头容量 Contact rating	6A, 250VAC(cos ϕ = 1) 6A, 250VAC(cos ϕ = 1)
触头材料 Contact material	银合金 Silver alloy
操动时间 Operating time	最大15毫秒 15 ms max.
预期电寿命 Expected electrical life	在额定电流下为100,000 次操动 100,000 operations at rated current
预期机械寿命 Expected mechanical life	$5x10^6$次操动 5×10^6 operations
认证 Approval	UL/CSA, VDE, TUV, SEMKO UL/CSA, VDE, TUV, SEMKO

认证 Mechanical	
安装方法 Mounting method	面板安装、DIN导轨安装、螺丝安装 Panel mounted, DIN rail mounted, Screws mounted
重量 Weight	0.3千克 0.3kg

*只适用KLR523E型号 *Applicable to KLR523E model only

KLR523/623/525/625Earth Leakage Relay

KLR523/623/525/625 漏电继电器

典型应用图Typical Application Diagram

KLR 523/623/525/625

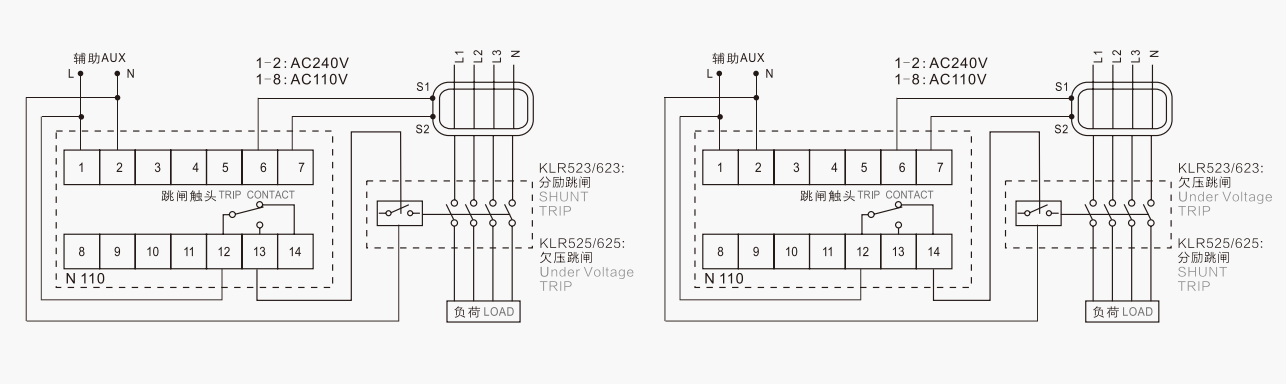

KLR523E/623E/525E/625E

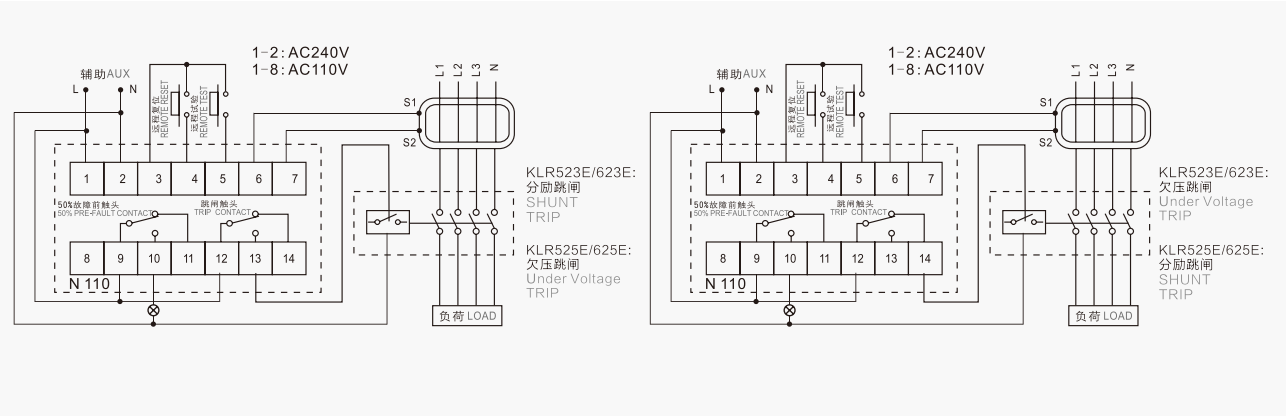

外壳尺寸 Case Dimensions

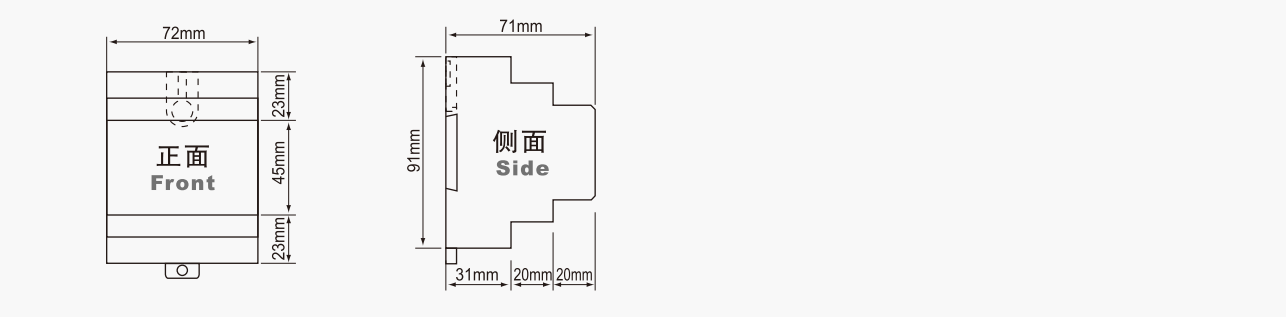

订购信息 Orde ring Information

型号 Model	品名 Description	
KLR523/623/525/625	带240V/110V交流，50/60Hz电源	With 240 V/110V AC, 50/60 Hz power supply
KLR523/623/525/625-110	带110V/110V交流，50/60Hz电源	With 110 V/110V AC, 50/60 Hz power supply
KLR523E/623E/525E/625E	带240V/110V交流，50/60Hz电源	With 240 V/110V AC, 50/60 Hz power supply
KLR523E/623E/525E/625E-110	带110V/110V交流，50/60Hz电源	With 110 V/110V AC, 50/60 Hz power supply

KCT Zero-Phase Current Transformer

KCT 零序电流互感器

技术数据 Technical Data

额定频率 Rated Frequency	50/60HZ	
准确值 Accuracy Class	5P、10P（外接电阻时） (When an external resistor in connected)	
额定匝数比 Rated turns ratio	1/210(可按用户需求定制) Can be customized	
剩余电流输入/感应输出电压参数 Residual current input / output voltage sensing parameters	零相（初级/次级） Zero Phase(Primary/Secodary)	额定电阻负荷 Rated Resistive Burden
	300mA/80mV	56Ω (KCT内带) Installed in KCT
	3A/80mV	5.6Ω (外接,在KLR523内) External connection, installed in KLR523
	30A/80mV	0.5Ω (外接,在KLR523内) External connection, installed in KLR523
额定一次电流 Rated primary current	0.3A	
额定准确限值一次电流 Rated accuracy limit primary current	3A	
准确限值系数 Accuracy limit factor ALF	10	
设备最高电压 Highest voltage for equipment	0.72kV	
额定工频耐受电压 Rated power-frequency withstand voltage	3kV	
工作温度 Operating Temperature	-25 ~ +40℃	

尺寸 Dimensions

尺寸Dimension(mm)	KCT40	KCT55	KCT80
A	40	55	80
B	79	126	120.5
C	97	151	138
D	3.5	4	3.5
E	35	37	35
F	53.5	100	94.5
G	17.5	14	17.5
H	17.5	19	17.5
I	32	44	37
J	10	12.5	10

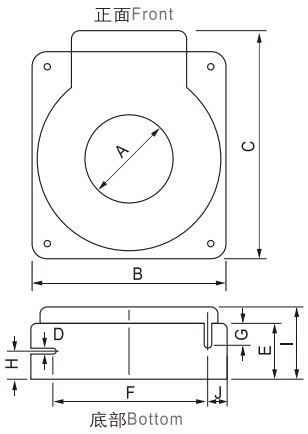

订购信息 Ordering Information

型号 Model	内径 Inner Dia	穿心电缆的最大电流 Maximum curent feed through cable	安装螺纹规格 Mounting thread size
KCT40	40mm	250A	M3.5
KCT55	55mm	400A	M4
KCT80	80mm	630A	M3.5

KCT Zero-Phase Current Transformer

KCT 零序电流互感器

技术数据 Technical Data

额定频率 Rated Frequency	50/60HZ	
准确值 Accuracy Class	5P、10P（外接电阻时） (When an external resistor in connected)	
额定匝数比 Rated turns ratio	1/210(可按用户需求定制) Can be customized	
剩余电流输入/感应输出电压参数 Residual current input / output voltage sensing parameters	零相（初级/次级） Zero Phase(Primary/Secodary)	额定电阻负荷 Rated Resistive Burden
	300mA/80mV	56Ω (KCT内带) Installed in KCT
	3A/80mV	5.6Ω (外接,在KLR523内) External connection, installed in KLR523
	30A/80mV	0.5Ω (外接,在KLR523内) External connection, installed in KLR523
额定一次电流 Rated primary current	0.3A	
额定准确限值一次电流 Rated accuracy limit primary current	3A	
准确限值系数 Accuracy limit factor ALF	10	
设备最高电压 Highest voltage for equipment	0.72kV	
额定工频耐受电压 Rated power-frequency withstand voltage	3kV	
工作温度 Operating Temperature	-25 ~ +40℃	

尺寸 Dimensions

尺寸Dimension(mm)	KCT100	KCT150	KCT200
A	100	150	200
B	135	183	265
C	140	193	275
D	5	5	5
F	122	170	245
I	26	27	30
K	10	13	-
L	110	150	-
M	5	5	-
N	40	41	44

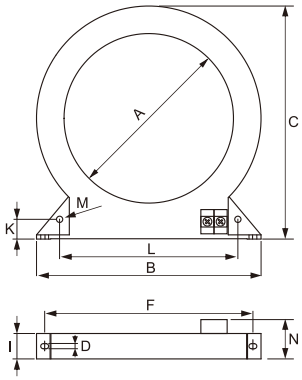

订购信息 Ordering Information

型号 Model	内径 Inner Dia	穿心电缆的最大电流 Maximum curent feed through cable	安装螺纹规格 Mounting thread size
KCT100	100mm	630A	M5
KCT150	150mm	800A	M5
KCT200	200mm	1000A	M5

KCT Zero-Phase Current Transformer

KCT 零序电流互感器

技术数据 Technical Data

额定频率 Rated Frequency	50/60HZ	
准确值 Accuracy Class	5P、10P（外接电阻时） (When an external resistor in connected)	
额定匝数比 Rated turns ratio	1/210(可按用户需求定制) Can be customized	
剩余电流输入/感应输出电压参数 Residual current input / output voltage sensing parameters	零相（初级/次级） Zero Phase(Primary/Secodary)	额定电阻负荷 Rated Resistive Burden
	300mA/80mV	56Ω (KCT内带) Installed in KCT
	3A/80mV	5.6Ω (外接,在KLR523内) External connection, installed in KLR523
	30A/80mV	0.5Ω (外接,在KLR523内) External connection, installed in KLR523
额定一次电流 Rated primary current	0.3A	
额定准确限值一次电流 Rated accuracy limit primary current	3A	
准确限值系数 Accuracy limit factor ALF	10	
设备最高电压 Highest voltage for equipment	0.72kV	
额定工频耐受电压 Rated power-frequency withstand voltage	3kV	
工作温度 Operating Temperature	-25 ~ +40℃	

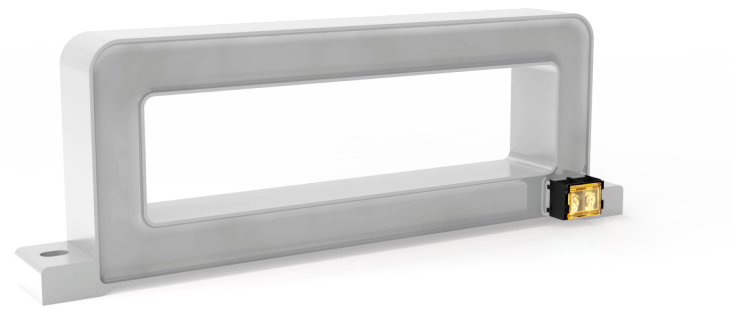

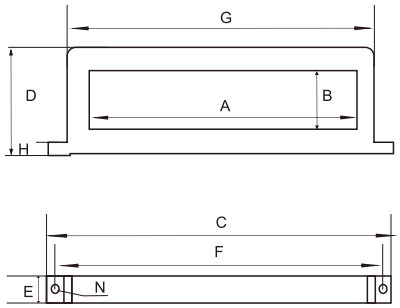

型号 Model	相电流 Phase Current	A	B	C	D	E	F	G	H	N
KCT1025	100	100	25	155	50	18	138	125	7	8
KCT1432	225	140	32	203	67	23	185	173	10	8
KCT1832	400	180	32	245	67	23	227	215	10	8
KCT2245	630	220	45	280	83	23	265	250	10	8
KCT2645	800	260	45	325	83	23	310	295	10	8
KCT3045	1250	300	45	365	83	23	350	335	10	8
KCT3445	2000	340	45	405	83	23	390	395	10	8
KCT4045	3500	400	45	465	83	23	450	435	10	8
KCT5045	5000	500	45	565	83	23	550	535	10	8

KER352/752 Earth Fault Relay

KER352/752 接地故障继电器

特征Features

- 真正RMS电流测量
- 低设接地故障
- 高设接地故障
- 被测和整定值的本地显示
- 故障值记录
- 可编程继电器输出端子
- 连续自我监督
- IEC正常反时限IDMT曲线
- True RMS current measurement
- Low-set earth-fault
- High-set earth-fault
- Local display of measured and set values
- Fault value recording
- Programmable relay outputs
- Continuous self-supervision
- IEC normal inverse IDMT curve

技术数据 Technical Data

整定值 Settings		
额定电流(In) Current rating(In)	5A 5A	
额定频率 Rated frequency	50/60Hz 50/60 Hz	
负荷 Burden	In时<0.3VA <0.3 VA at In	
热耐受 Thermal withstand	4× In连续 4 x In continuous	
辅助电源 Auxiliary supply		
电源电压 Supply voltage	198-265V 交流 198~265 V AC	
	90-120V 交流 90~120 V AC	
电源频率 Frequency	50/60Hz 50/60Hz	
VA额定值 VA rating	正常值3VA 3 VA typical	
触头 Contacts		
触头配置 Contact arrangement	切换 Change-over	
触头容量 Contact rating	6A, 250VAC(cos ϕ = 1)用于跳闸触头 6A, 250V AC (cosφ =1) for tripping contact	
	6A, 250VAC(cos ϕ = 1)用于信号触头跳闸触头 5A, 250V AC (cosφ =1) for signaling contact tripping contact	
触头材料 Contact material	银合金 Silver alloy	
操动时间 Operating time	最大15毫秒 15 ms max.	
预期电寿命 Expected electrical life	100,000 次操动(在额定电流下) 100,000 operations at rated current	
预期机械寿命 Expected mechanical life	5× 10^6次操动 5× 10^6 operations	
认证 Approval	UL/CSA, VDE, TUV, SEMKO	
指示灯 Indicators		
辅助电源 Auxiliary supply	LED指示灯 UL/CSA,VDE, TUV,SEMKO	
动作 Pick-up	LED指示灯 LED	
跳闸指示灯 Trip indicator	7-段显示和LED指示灯 7-segment display and LED	
机械 Mechanical		
安装 Mounting	面板安装、DIN导轨安装、螺丝安装 Panel mounted, DIN rail mounted, Screws mounted	
正面面板 Front panel	标准DIN 96毫米×96毫米 Standard DIN 96 mm× 96 mm	
重量 保护门槛值 Weight	0.9千克 0.9kg	
精度 Accuracy		
保护门槛值 Protection thresholds	± 5% ± 5%	
延时 Time delay	时间最小为50毫秒时为±5% ± 5% with a minimum of 50ms	
整定值范围 Setting ranges		
低设(I>) Low-set (I>>)	0.1A到2.0A, 阶跃0.01A/2%到40%, 阶跃0.2% 0.1A to 2.0A, step 0.01A/2% to 40%, step 0.2%	
低设时间倍增器 (kt>) Low-set time multiplier (kt>)	0.05到1.0, 阶跃0.01 0.05 to 1.0, step 0.01	
高设(I >>) High-set (I>>)	0.1A到40A, 阶跃0.01A/2%到800%, 阶跃0.2% 0.1A to 40A, step 0.01A/2% to 800%, step 0.2%	
高设 (t>>) High-set delay time (t>>)	0.05到99秒 0.05 sec to 99 sec	阶跃0.01(0.05-1.00) Step 0.01 (0.05~1.00)
		阶跃0.10(1.00-10.0) Step 0.10 (1.00~10.0)
		阶跃1.00(10.0-99.0) Step 1.00 (10.0~99.0)

KER352/752 Earth Fault Relay

KER352/752 接地故障继电器

曲线Inverse

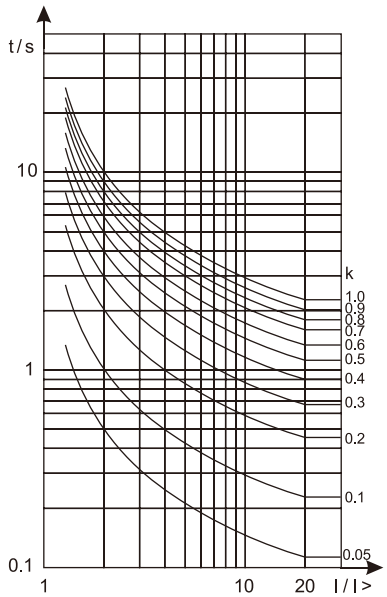

接线图Diagram

KER352	KER752E

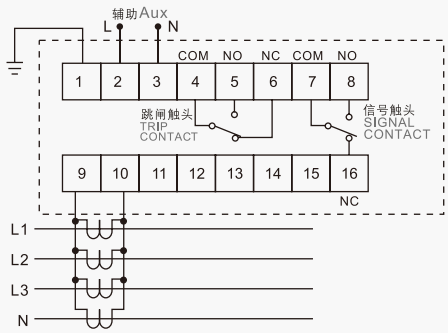

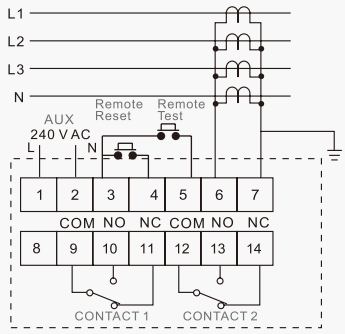

* TRIPPING CONTACTS	CONTACT 1 AUTO RESET
	CONTACT 2 MANUAL RESET

KER752	KER752T

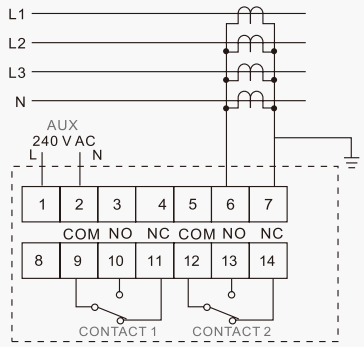

* TRIPPING CONTACTS	CONTACT 1 AUTO RESET
	CONTACT 2 MANUAL RESET

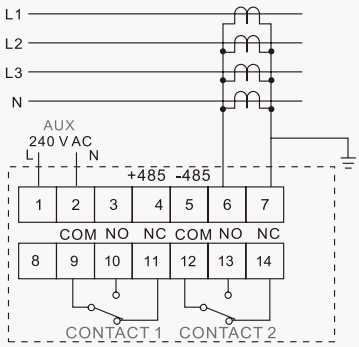

* TRIPPING CONTACTS	CONTACT 1 AUTO RESET
	CONTACT 2 MANUAL RESET

KER352/752 Earth Fault Relay

KER352/752 接地故障继电器

外壳尺寸 Case Dimensions

KER352

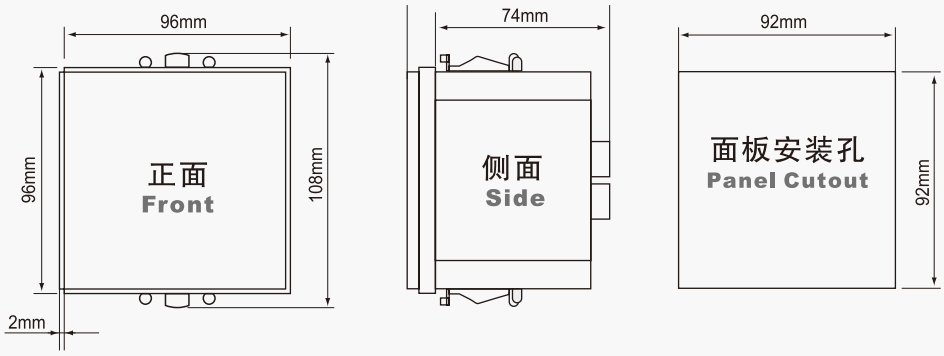

KER752

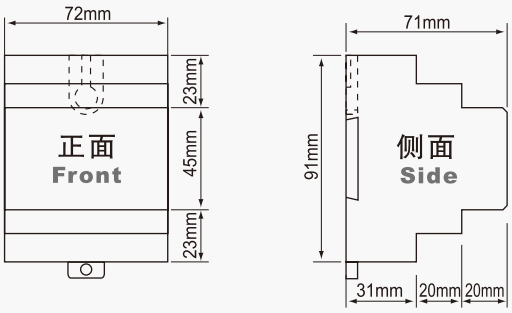

定购信息 Ordering Information

型号 Model	品名 Description
KER352/752	带240V交流，50/60Hz电源 With 240 V AC, 50/60 Hz power supply
KER352/752-110	带110V交流，50/60Hz电源 With 110 V AC, 50/60 Hz power supply
KER352E/752E	带240V交流，50/60Hz电源 With 240 V AC, 50/60 Hz power supply
KER352E/752E-110	带110V交流，50/60Hz电源 With 110 V AC, 50/60 Hz power supply
KER352T/752T	带240V交流，50/60Hz电源 With 240 V AC, 50/60 Hz power supply
KER352T/752T-110	带110V交流，50/60Hz电源 With 110 V AC, 50/60 Hz power supply

KER152/652 Earth Fault Relay

KER152/652 接地故障继电器

特征 Features

- 低设反时限(IDMT) 继电器
- 高设瞬动继电器
- 独立低设和高设跳闸指示灯
- 跳闸启动指示
- Low-set inverse definite minimum time (IDMT) relay
- High-set instantaneous relay
- Separate low-set and high-set trip indicators
- Trip starting indication

技术数据 Technical Data

整定值 Settings	
额定电流(In) Current rating(In)	5A 5A
额定频率 Rated frequency	50/60Hz 50/60 Hz
负荷 Burden	In时<0.3VA <0.3 VA at In
热耐受 Thermal withstand	4× In连续 4 x In continuous
辅助电源 Auxiliary supply	
电源电压 Supply voltage	198-265V 交流 198~265 V AC
电源频率 Supply frequency	50/60Hz 50/60Hz
触头 Contacts	
触头配置 Contact arrangement	自动复位类型 Automatic reset type
触头容量 Contact rating	常闭(NC)和常开(NO)触头类型 NC & NO contact type
	6A, 250VAC(cos ϕ = 1)触头额定值 6A,250V AC (cosφ =1) contact rating
	银合金触头材料 Silver alloy contact material
	在额定电流下可实现100,000次电操动 100,000 electrical operations at rated current
	通过UL/CSA，TUV认证 UL/CSA, TUV approved
指示灯 Indicators	
跳闸指示灯 Trip indicator	手动复位类型 Manual reset type
机械 Mechanical	
安装 Mounting	面板安装、DIN导轨安装、螺丝安装 Panel mounted, DIN rail mounted, Screws mounted
正面面板 Front panel	标准DIN 96毫米 x 96毫米 Standard DIN 96 mm × 96 mm
近似重量 Weight	0.9千克 0.9 kg
性能 Performance	
精度调整范围 Adjustable accuracy	小于± 5% Less than ± 5%.
可重复性 Repeatability	满量程时小于0.5% Less than 0.5% of full scale.
整定值范围 Setting ranges	
低设(I>) Low-set (I>)	0.1A到2.0A, 2%到40% 0.1 A to 2.0 A, 2% to 40%
低设时间倍增器(kt>) Time multiplier	0.01到1.0 0.01 to 1.0
IDMT曲线 IDMT curve	正常反时限 Normal Inverse
高设(I> >) High-set (I>>)	I>到5 I> I> to 5 I>

KER152/652 Earth Fault Relay

KER152/652 接地故障继电器

典型应用图 Typical application diagram

KER152

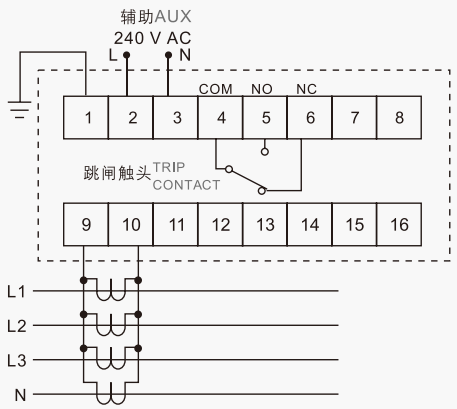

KER652

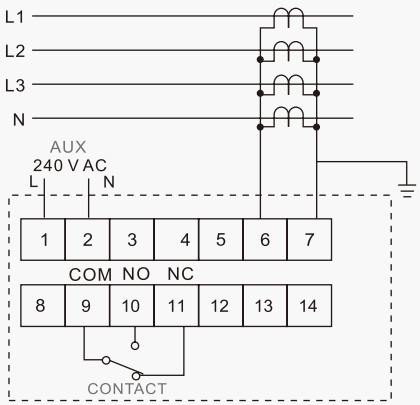

KER652E

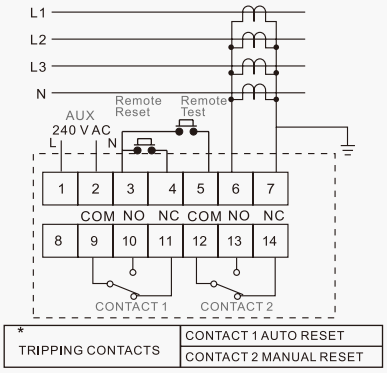

组合IDMT过电流&接地故障继电器 Ombined IDMT overcurrent & earth fault relays

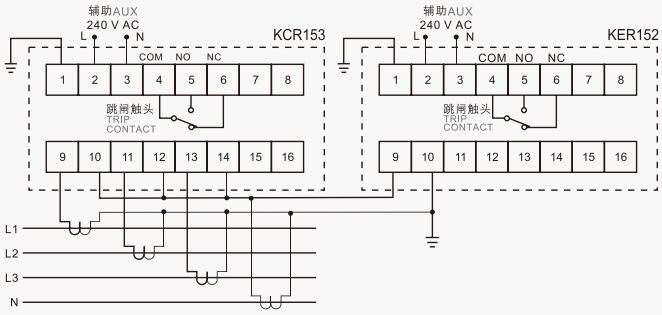

外壳尺寸 Case Dimensions

KER152

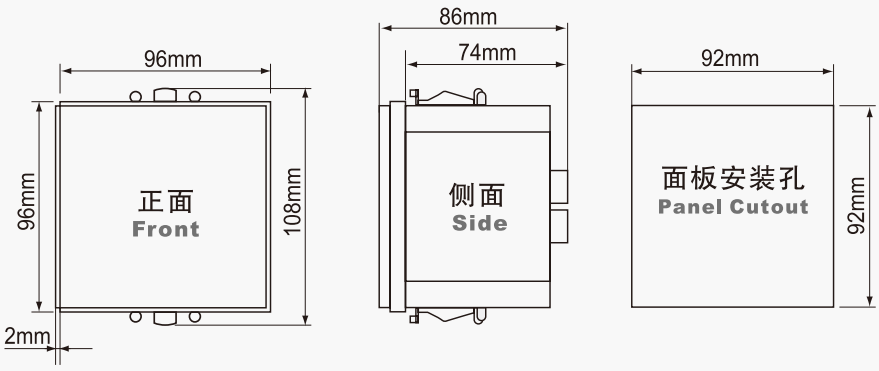

KER151/652 Earth Fault Relay

KER152/652 接地故障继电器

KER652

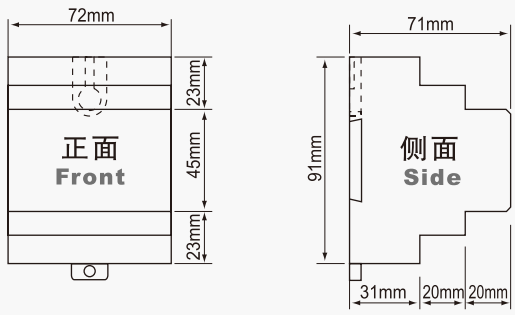

订购信息 Ordering Information

型号 Model	品名 Description
KER152/652	带240V交流，50/60Hz电源 With 240 V AC, 50/60 Hz power supply
KER152/652-110	带110V交流，50/60Hz电源 With 110 V AC, 50/60 Hz power supply
KER152E/652E	带240V交流，50/60Hz电源 With 240 V AC, 50/60 Hz power supply
KER152E/652E-110	带110V交流，50/60Hz电源 With 110 V AC, 50/60 Hz power supply

KER141/641 Earth Fault Relay

KER141/641 接地故障继电器

特征 Features

- 低设定时继电器
- 高设瞬动继电器
- 独立低设和高设跳闸指示灯
- 低设跳闸和动作指示
- 高设跳闸指示灯
- 可选择自动复位和手动复位
- 可选择禁止高设继电器
- 通过正面面板进入试验功能
- Low-set definite time relay
- High-set instantaneous relay
- Separate low-set and high-set trip indicators
- Low-set trip and pickup indicator
- High-set trip indicator
- Auto reset and manual reset contacts available
- Option to disable the high-set relay
  Front panel access to the test function

技术数据 Technical Data

整定值 Settings	
额定电流(In) Current rating(In)	5A 5A
额定频率 Rated frequency	50/60Hz 50/60 Hz
负荷 Burden	In时<0.3VA <0.3 VA at In
热耐受 Thermal withstand	4× In连续 4 x In continuous
辅助电源 Auxiliary supply	
电源电压 Supply voltage	198-265V交流，90-120V交流 198~265 V AC, 90~120 V AC
电源频率 Supply frequency	50/60Hz 50/60Hz
VA额定值 VA rating	<3VA <3VA
触头 Contacts	
触头配置 Contact arrangement	1x锁定型，带手动复位 1 × latching type with manual reset
	1x非锁定型，带自动复位 1 × non-latching type with auto reset
	有常开和常闭触头 Both NC and NO contacts available
触头容量 Contact rating	6A, 250VAC(cos ϕ = 1)跳闸触头 6A,250V AC (cosφ =1) For tripping contact
触头材料 Contact material	银合金 Silver alloy
操动时间 Operating time	最大15毫秒 15 ms max.
预期电寿命 Expected electrical life	在额定电流下可实现100,000 次电操动 100,000 operations at rated current
预期机械寿命 Expected mechanical life	5×10^6次操动 5×10^6 operations
认证 Approval	通过UL/CSA, VDE, TUV, SEMKO认证 UL/CSA, VDE, TUV, SEMKO
指示灯 Indicators	
辅助电源 Auxiliary supply	绿色LED指示灯 Green LED indicator light
跳闸指示灯 Trip indicator	手动复位类型 Manual reset type
机械 Mechanical	
安装 Mounting	面板安装、DIN导轨安装、螺丝安装 Panel mounted, DIN rail mounted, Screws mounted
正面面板 Front panel	标准DIN 96毫米× 96毫米 Standard DIN 96 mm× 96 mm
近似重量 Weight	0.9千克 0.9 kg
性能 Performance	
精度调整范围 Adjustable accuracy	小于± 5% Less than ± 5%.
可重复性 Repeatability	满量程时小于0.5% Less than 0.5% of full scale.
整定值范围 Setting ranges	
低设(I>) Low-set (I>)	0.1A到2.0A, 0.1 A to 2.0 A
	2%到40% 2% to 40%
低设延时 Low-set delay time	0.1秒到1.0秒 0.01 sec to 1.0 sec
高设(I> >) High-set(I>>	I>到5 I> I> to 5 x I>
高设延时(t> >) High-set delay time (t >>)	瞬时 Instantaneous

KER141/641 Earth Fault Relay

KER141/641 接地故障继电器

典型应用图 Typical application diagram

KER141

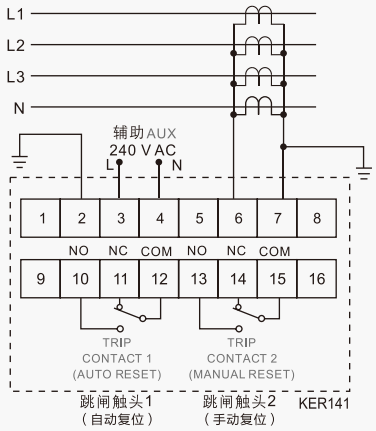

KER641

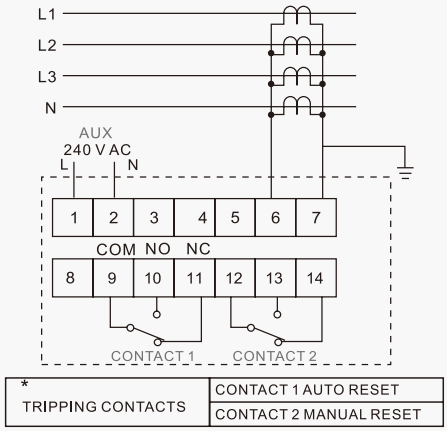

组合IDMT过电流&接地故障继电器Combined IDMT overcurrent & earth fault relays

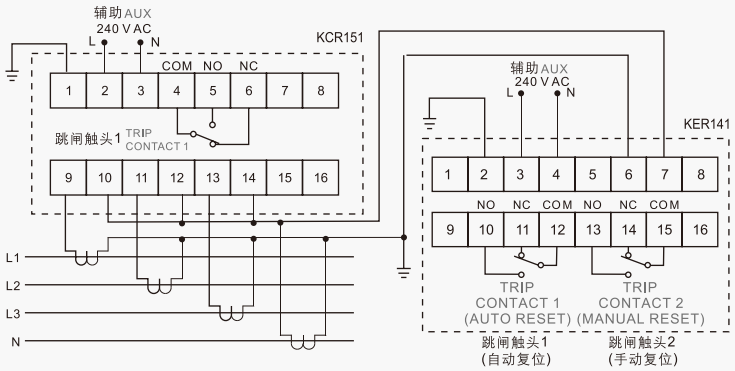

外壳尺寸Case dimensions

KER141

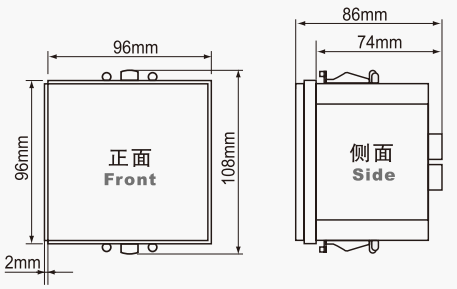

KER641

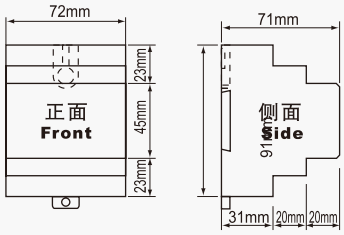

定购信息Ordering Information

型号 Model	品名 Description
KER141/641	带240V交流，50/60Hz电源 With 240 V AC, 50/60 Hz power supply
KER141/641-110	带110V交流，50/60Hz电源 With 110 V AC, 50/60 Hz power supply
KER141E/641E	带240V交流，50/60Hz电源 With 240 V AC, 50/60 Hz power supply
KER141E/641E-110	带110V交流，50/60Hz电源 With 110 V AC, 50/60 Hz power supply

KCR353/753 Overcurrent Relay

KCR353/753 过电流继电器

特征 Features

- 真正RMS电流测量
- 三相, 低设过电流
- 三相, 高设过电流
- 被测和整定值的本地显示
- 故障值记录
- 可编程继电器输出端子
- 连续自我监督
- IEC正常反时限IDMT曲线
- Microprocessor based digital relay
- Three-phase, low-set overcurrent
- Three-phase, high-set overcurrent
- Low-set earth-fault
- High-set earth-fault
- Local display of measured and set values
- Fault value recording
- Programmable auto or manual reset
- IEC normal inverse or very inverse curve

技术数据 Technical Data

整定值 Settings		
额定电流(In) Current rating(In)	5A 5A	
额定频率 Rated frequency	50/60Hz 50/60 Hz	
负荷 Burden	In时<0.3VA <0.3 VA at In	
热耐受 Thermal withstand	4 × In 连续 4 x In continuous	
辅助电源 Auxiliary supply		
电源电压 Supply voltage	198-265V交流 , 90-120V 交流 198~265 V AC, 90~120 V AC	
电源频率 Supply frequency	50/60Hz 50/60Hz	
VA额定值 VA rating	正常值3VA 3VA typical	
触头 Contacts		
触头配置 Contact arrangement	切换 Change-over	
触头容量 Contact rating	6A, 250VAC(cos ϕ = 1)跳闸触头 6A,250V AC (cosφ =1) For tripping contact	
	6A, 250VAC(cos ϕ = 1)用于信号触头 跳闸触头 5A, 250V AC (cosφ=1) for signaling contact tripping 6A,250V AC (cosφ=1) For tripping contact	
触头材料 Contact material	银合金 Silver alloy	
操动时间 Operating time	最大15毫秒 15 ms max.	
预期电寿命 Expected electrical life	100,000 次操动(在额定电流下) 100,000 operations at rated current	
预期机械寿命 Expected mechanical life	5×10^6次操动 5×10^6 operations	
认证 Approval	UL/CSA, VDE, TUV, SEMKO UL/CSA, VDE, TUV, SEMKO	
指示灯 Indicators		
辅助电源 Auxiliary supply	LED指示灯 LED	
动作 Pick-up	LED指示灯 LED	
跳闸指示灯 Trip indicator	7-段显示和LED 7-segment display and LED	
机械 Mechanical		
安装 Mounting	面板安装、DIN导轨安装、螺丝安装 Panel mounted, DIN rail mounted, Screws mounted	
正面面板 Front panel	标准DIN 96毫米× 96毫米 Standard DIN 96 mm × 96 mm	
近似重量 Weight	1.3千克 1.3 kg	
精度 Accuracy		
保护门槛值 Protection thresholds	± 5% ± 5%	
延时 Time delay	时间最小为50毫秒时为 ± 5% ± 5% with a minimum of 50ms	
整定值范围 Setting ranges		
低设(I>) Low-set (I>)	2.0A到6.0A, 阶跃0.05A/40%到120%, 阶跃1% 2.0 A to 6.0 A, step 0.05A/40% to 120%, step 1%	
低设时间倍增器 (kt>) Low-set time multiplier (kt>)	0.05到1.0, 阶跃0.01 0.05 to 1.0, step 0.01	
高设(I >>) High-set(I>>	2.0A到99.9A, 阶跃0.10A/40%到1998%, 阶跃2% 2.0 A to 99.9 A, step 0.10A/40% to 198%, step 2%	
高设延时 (t> >) High-set delay time (t >>)	0.05到99秒 0.05 sec to 99sec	阶跃0.01(0.05-1.00) step 0.01(0.05-1.00) 阶跃0.10(1.00-10.0) step 0.10(1.00-10.0) 阶跃1.00(10.0-99.0) step 1.00(10.0-99.0)

KCR353/753 Overcurrent Relay

KCR353/753 过电流继电器

曲线 Inverse

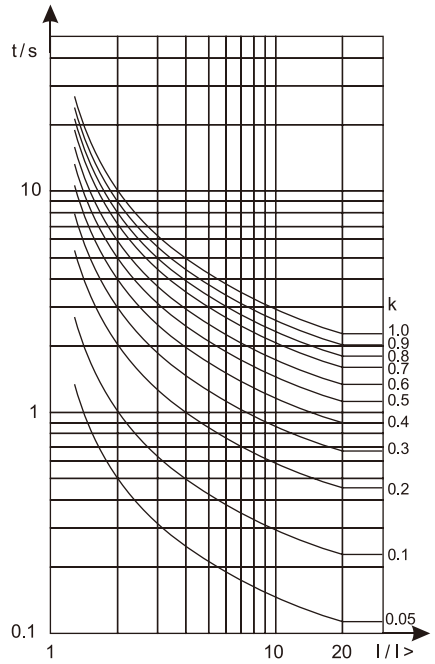

接线图 Diagram

KCR353

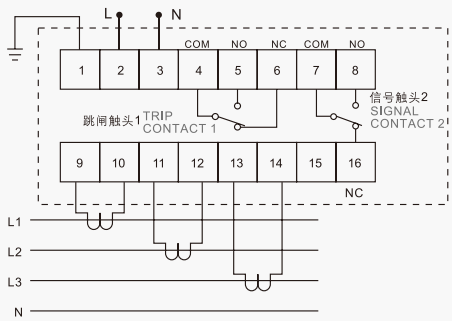

KCR753

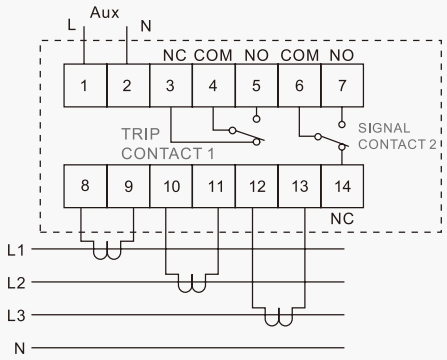

KCR753E

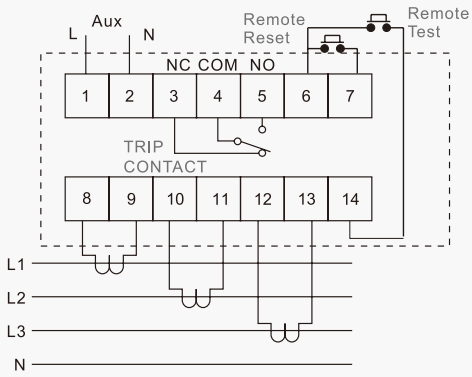

KCR753T

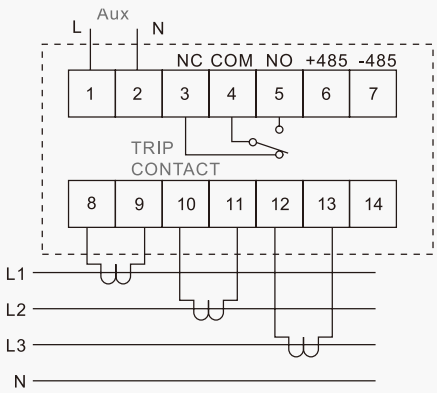

KCR353/753 Overcurrent Relay

KCR353/753 过电流继电器

外壳尺寸 Case Dimensions

KCR353

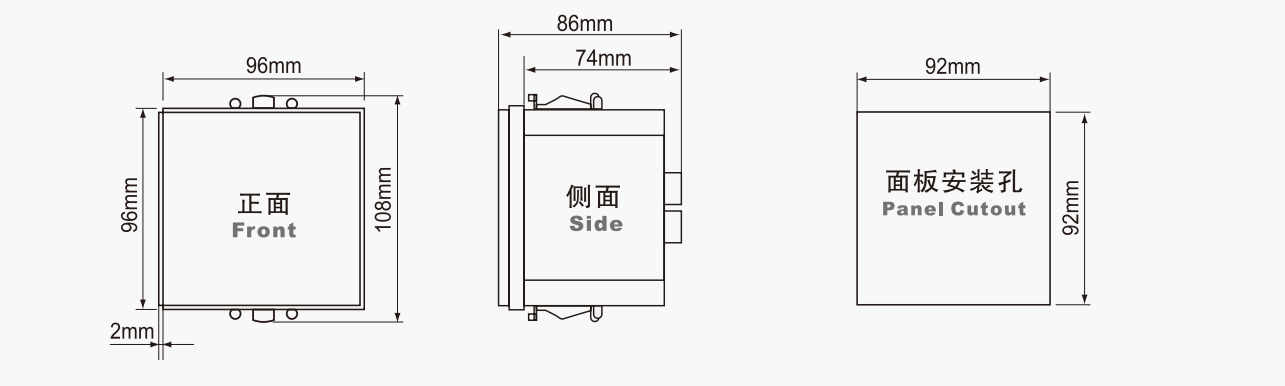

KCR753

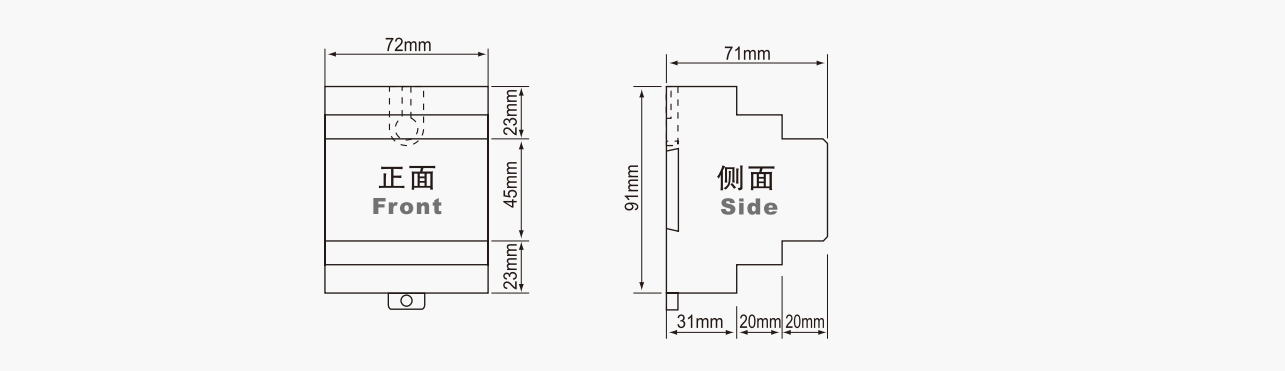

订购信息 Ordering Information

型号 Model	品名 Description
KCR353/753	带240V交流，50/60Hz电源 With 240 V AC, 50/60 Hz power supply
KCR353/753-110	带110V交流，50/60Hz电源 With 110 V AC, 50/60 Hz power supply
KCR353E/753E	带240V交流，50/60Hz电源 With 240 V AC, 50/60 Hz power supply
KCR353E/753E-110	带110V交流，50/60Hz电源 With 110 V AC, 50/60 Hz power supply
KCR353T/753T	带240V交流，50/60Hz电源 With 240 V AC, 50/60 Hz power supply
KCR353T/753T-110	带110V交流，50/60Hz电源 With 110 V AC, 50/60 Hz power supply

KCR153/653 Overcurrent Relay

KCR153/653 过电流继电器

特征 Features

- 低设反时限(IDMT) 继电器
- 高设瞬动继电器
- 独立低设和高设跳闸指示灯
- 跳闸启动指示
- Low-set inverse definite minimum time (IDMT) relay
- High-set instantaneous relay
- Separate low-set and high-set trip indicators
- Trip starting indication

技术数据Technical Data

整定值Settings	
额定电流(In) Current rating(In)	5A 5A
额定频率 Rated frequency	50/60Hz 50/60 Hz
负荷 Burden	In时<0.3VA <0.3 VA at In
热耐受 Thermal withstand	4× In连续 4 x In continuous
辅助电源 Auxiliary supply	
电源电压 Supply voltage	198-265V 交流 198~265 V AC
电源频率 Supply frequency	50/60Hz 50/60Hz
触头 Contacts	
触头配置 Contact arrangement	自动复位类型 Automatic reset type
触头容量 Contact rating	常闭（NC）和常开（NO）触头类型 NC & NO contact type
	6A, 250VAC(cos ϕ = 1)触头额定值 6A,250V AC (cosφ =1) contact rating
	银合金触头材料 Silver alloy contact material
	在额定电流下可实现100,000 次电操动 100,000 electrical operations at rated current
	通过UL/CSA, TUV认证 UL/CSA, TUV approved
指示灯 Indicators	
跳闸指示灯 Trip indicator	手动复位类型 Manual reset type
机械 Mechanical	
安装 Mounting	面板安装、DIN导轨安装、螺丝安装 Panel mounted, DIN rail mounted, Screws mounted
正面面板 Front panel	标准DIN 96毫米×96毫米 Standard DIN 96 mm × 96 mm
近似重量 Weight	1.2千克 1.2 kg
性能 Performance	
精度调整范围 Adjustable accuracy	小于± 5% Less than ± 5%.
可重复性 Repeatability	满量程时小于0.5% Less than 0.5% of full scale.
整定值范围 Setting ranges	
低设(I>) Low-set (I>)	2.0A到6.0A, 40%到120% 2.0 A to 6.0 A, 40% to 120%
低设时间倍增器 (kt>) Time multiplier	0.01到1.0 0.01 to 1.0
IDMT曲线 IDMT curve	正常反时限 Normal Inverse
高设(I> >) High-set (I>>)	I>到5 I> I> to 5 I>

KCR153/653 Overcurrent Relay

KCR153/653 过电流继电器

典型应用图 Typical application diagram

KCR153

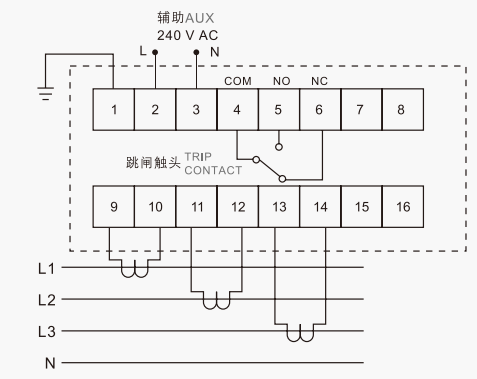

KCR653D

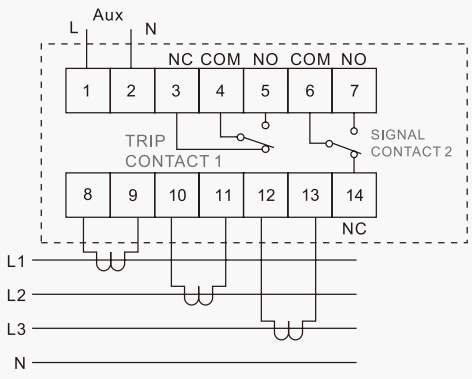

组合IDMT过电流&接地故障继电器Combined IDMT overcurrent & earth fault relays

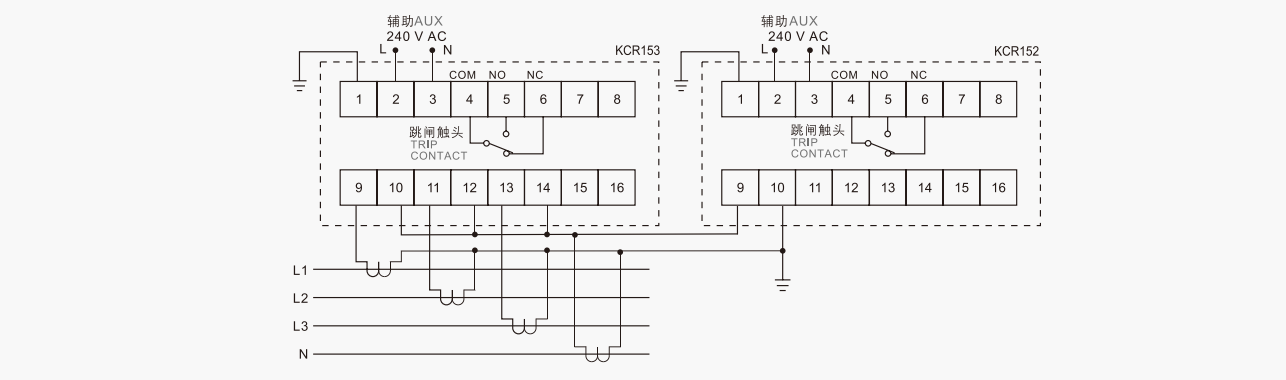

外壳尺寸Case Dimensions

KCR153

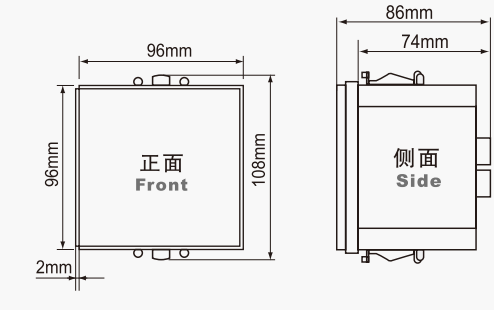

KCR653

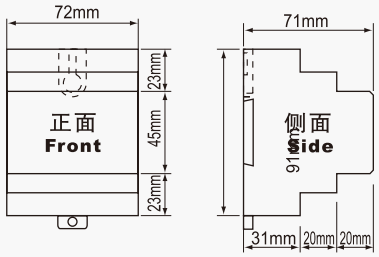

定购信息Ordering Information

型号 Model	品名 Description
KCR153/653	带240V交流，50/60Hz电源 With 240 V AC, 50/60 Hz power supply
KCR153/653-110	带110V交流，50/60Hz电源 With 110 V AC, 50/60 Hz power supply
KCR153D/653D	带240V交流，50/60Hz电源 With 240 V AC, 50/60 Hz power supply
KCR153D/653D-110	带110V交流，50/60Hz电源 With 110 V AC, 50/60 Hz power supply
KCR153E/653E	带240V交流，50/60Hz电源 With 240 V AC, 50/60 Hz power supply
KCR153E/653E-110	带110V交流，50/60Hz电源 With 110 V AC, 50/60 Hz power supply

KCR151/651 Inverse Time Overcurrent Relay

KCR151/651 反时限过电流继电器

特征Features

- 低设反时继电器
- 高设瞬动继电器
- 独立低设和高设跳闸指示灯
- 跳闸启动指示
- Low-set inverse time relay
- High-set instantaneous relay
- Separate low-set and high-set trip indicators
- Trip starting indication

技术数据Technical Data

整定值 Settings	
额定电流(In) Current rating(In)	5A 5A
额定频率 Rated frequency	50/60Hz 50/60 Hz
负荷 Burden	In时<0.3VA <0.3 VA at In
热耐受 Thermal withstand	4 × In连续 4 x In continuous
辅助电源 Auxiliary supply	
电源电压 Supply voltage	198-265V 交流 198~265 V AC
电源频率 Supply frequency	50/60Hz 50/60Hz
触头 Contacts	
触头配置 Contact arrangement	自动复位类型 Automatic reset type
触头容量 Contact rating	常闭（NC）和常开（NO）触头类型 NC & NO contact type
	6A, 250VAC(cos ϕ = 1)触头额定值 6A,250V AC (cosφ =1) contact rating
	银合金触头材料 Silver alloy contact material
	在额定电流下可实现100,000 次电操动 100,000 electrical operations at rated current
	通过UL/CSA, TUV认证 UL/CSA, TUV approved
指示灯 Indicators	
跳闸指示灯 Trip indicator	手动复位类型 Manual reset type
机械 Mechanical	
安装 Mounting	面板安装、DIN导轨安装、螺丝安装 Panel mounted, DIN rail mounted, Screws mounted
正面面板 Front panel	标准DIN 96毫米× 96毫米 Standard DIN 96 mm× 96 mm
近似重量 Weight	1.2千克 1.2 kg
性能 Performance	
精度调整范围 Adjustable accuracy	小于± 5% Less than ± 5%.
可重复性 Repeatability	满量程时小于0.5% Less than 0.5% of full scale.
整定值范围 Setting ranges	
低设(I>) Low-set (I>)	2.0A到6.0A, 40%到120% 2.0 A to 6.0 A, 40% to 120%
低设时间倍增器(kt>) Time multiplier	0.01到1.0 0.01 to 1.0
高设(I> >) High-set (I>>)	I>到5 I> I> to 5 I>

KCR151/651 Inverse Time Overcurrent Relay

KCR151/651 反时限过电流继电器

接线图 Diagram

典型应用图 Typical application diagram

KCR151

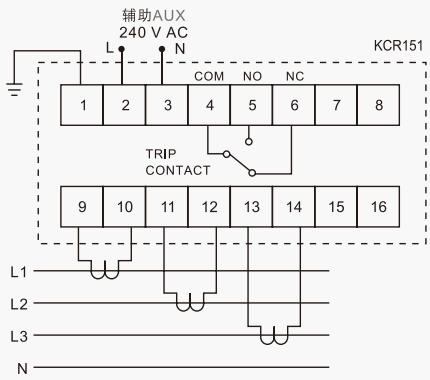

KCR651D

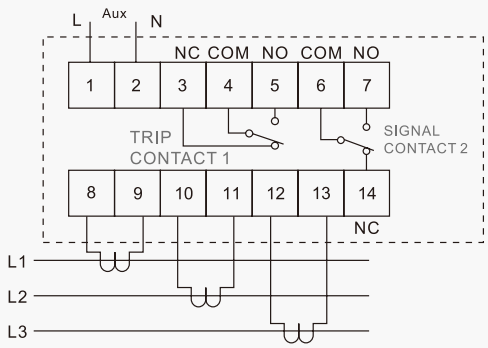

组合IDMT过电流&接地故障继电器Combined IDMT overcurrent & earth fault relays

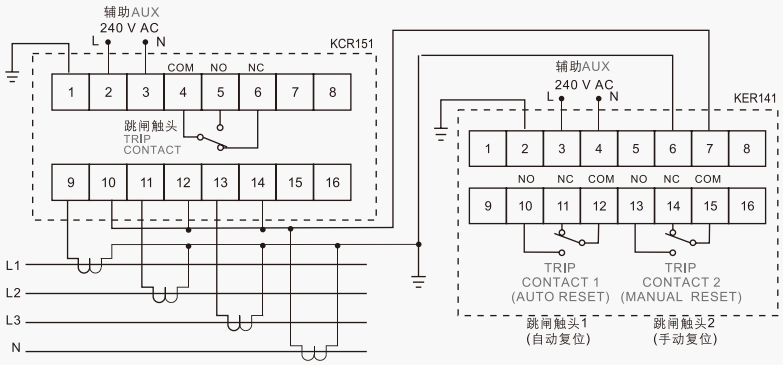

外壳尺寸Case dimensions

KCR151

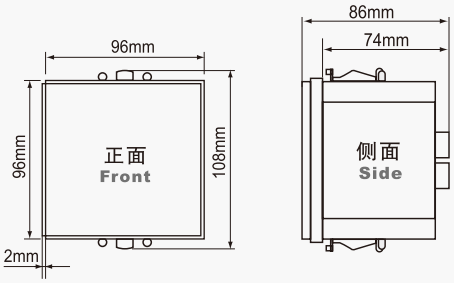

KCR651

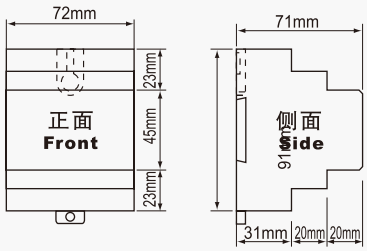

定购信息Ordering Information

型号 Model	品名 Description
KCR151/651	带240V交流，50/60Hz电源 With 240 V AC, 50/60 Hz power supply
KCR151/651-110	带110V交流，50/60Hz电源 With 110 V AC, 50/60 Hz power supply
KCR151D/651D	带240V交流，50/60Hz电源 With 240 V AC, 50/60 Hz power supply
KCR151D/651D-110	带110V交流，50/60Hz电源 With 110 V AC, 50/60 Hz power supply
KCR151E/651E	带240V交流，50/60Hz电源 With 240 V AC, 50/60 Hz power supply
KCR151E/651E-110	带110V交流，50/60Hz电源 With 110 V AC, 50/60 Hz power supply

KIR310/710 Combined Overcurrent & Earth Fault Relay

KIR310/710 组合式过电流和接地故障继电器

特征Features

- 采用微处理器的数字继电器
- 三相, 低设相位过电流
- 三相, 高设相位过电流
- 低设接地故障
- 高设接地故障
- 可选择IDMT特征曲线
- 被测和整定值的本地显示
- 故障值记录
- 可编程手动或自动复位
- IEC正常反时限或甚反时限曲线
- Microprocessor based digital relay
- Three-phase, low-set overcurrent
- Three-phase, high-set overcurrent
- Low-set earth-fault
- High-set earth-fault
- Local display of measured and set values
- Fault value recording
- Programmable auto or manual reset
- IEC normal inverse or very inverse curve

技术数据 Technical Data

整定值 Settings	
额定电流(In) Current rating(In)	5A 5A
额定频率 Rated frequency	50/60Hz 50/60 Hz
负荷 Burden	In时<0.3VA <0.3 VA at In
热耐受 Thermal withstand	4× In连续 4 x In continuous
辅助电源 Auxiliary supply	
电源电压 Supply voltage	198-265V 交流, 90-120V 交流 198~265 V AC, 90~120 V AC
电源频率 Supply frequency	50/60Hz 50/60Hz
VA额定值 VA rating	正常值3VA 3VA typical
触头 Contacts	
触头配置 Contact arrangement	切换 Change-over
触头容量 Contact rating	6A, 250VAC(cosφ = 1)跳闸触头 6A, 250VAC (cosφ =1) for tripping contact
触头材料 Contact material	银合金 Silver alloy
操动时间 Operating time	最大15毫秒 15 ms max.
预期电寿命 Expected electrical life	100,000 次操动(在额定电流下) 100,000 operations at rated current
预期机械寿命 Expected mechanical life	5×10^6次操动 5×10^6 operations
认证 Approval	UL/CSA, VDE, TUV, SEMKO UL/CSA, VDE, TUV, SEMKO
指示灯 Indicators	
辅助电源 Auxiliary supply	LED指示灯 LED
动作 Pick-up	LED指示灯 LED
跳闸指示灯 Trip indicator	7-段显示和LED 7-segment display and LED
机械 Mechanical	
安装 Mounting	面板安装、DIN导轨安装、螺丝安装 Panel mounted, DIN rail mounted, Screws mounted
正面面板 Front panel	标准DIN 96毫米× 96毫米 Standard DIN 96 mm× 96 mm
近似重量 Weight	1.3千克 1.3 kg
精度 Accuracy	
保护门槛值 Protection thresholds	± 5% ± 5%
延时 Time delay	时间最小为50毫秒时为± 5% ± 5% with a minimum of 50ms
测量 Measurements	± 5% ± 5% with a minimum of 50ms

整定值范围 Setting ranges

过电流部件 Overcurrent elements			
低设(I>)	Low-set (I>)	2.0A 到6.0A, 阶跃0.05A	2.0A to 6.0 A,step 0.05 A
		40% 到 120%, 阶跃 1%	40% to 120 % step 1%
低设时间倍增器(kt>)	Low-set time multiplier (kt>)	0.05 到1.0, 阶跃0.01	0.05 to 1.0, step 0.01
高设(I >>)	High-set (I>>)	2.0A 到99.9A, 阶跃0.10A	2.0A TO 99.9 A, step 0.10A
		40% 到 1998%, 阶跃 2%	40% to 1998%, step 2%
高设延时(t>>)	High-set delay time (I>>)	0.25秒到2.5秒, 阶跃0.01	0.05 sec to 2.5 sec, step 0.01
接地故障部件	Earth-fault element		
低设(Io>)	Low-set (Io>)	0.25A 到2.0A, 阶跃0.01A	0.25A to 2.0 A, step 0.01A
		5% 到 40%, 阶跃 0.2%	5% to 40 % step 0.2%
低设时间倍增器(kto>)	Low-set time multiplier(kt>)	0.05A 到1.0, 阶跃0.01A	0.05 to 1.0, step 0.01
高设(Io>>)	High-set (Io>>)	0.25A 到30A, 阶跃0.10A	0.25A to 30 A, step 0.10A
		50% 到 600%, 阶跃 2%	50% to 600%, step 2%
高设延时(to>>)	High-set delay time (to>>)	0.05秒到2.5秒 , 阶跃0.01	0.05 sec to 2.5 sec, step 0.01
时间电流特征曲线	Time current characteristic curve	正常反时限(型号KIR310)	Normal inverse (Model KIR310)
		甚反时限(型号KIR310V)	Very inverse (Model KIR310V)

KIR310/710 Combined Overcurrent & Earth Fault Relay

KIR310/710 组合式过电流和接地故障继电器

曲线 Inverse

正常反时限Normal inverse

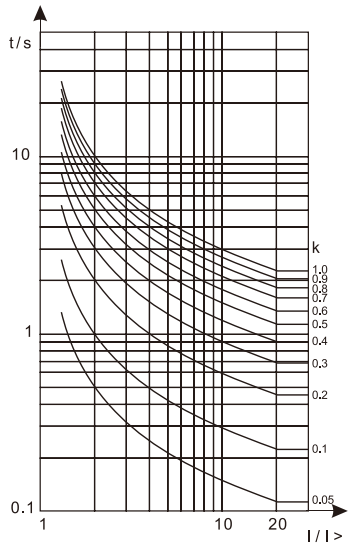

甚反时限 Very inverse

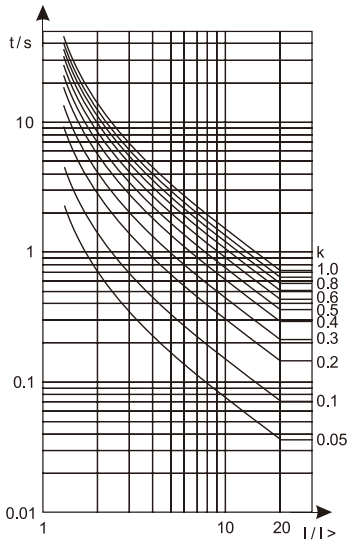

接线图 Diagram

KIR310

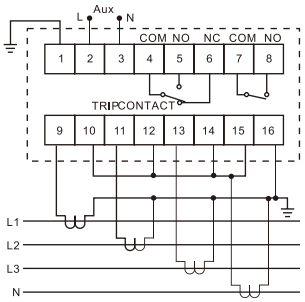

KIR710

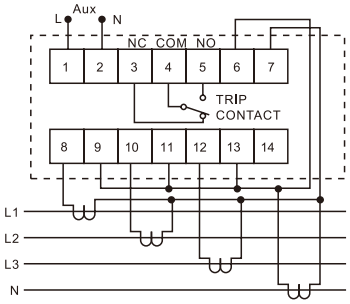

外壳尺寸 Case dimensions

KIR310

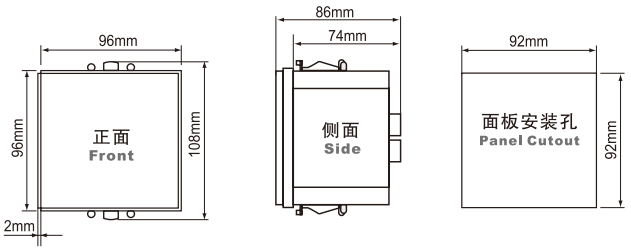

KIR710

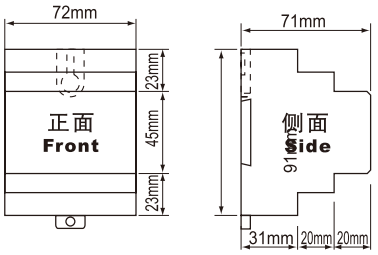

订购信息 Ordering Information

型号 Model	品名 Description
KIR310/710	带240V交流，50/60Hz电源和正常反时限IDMT曲线 With 240 V AC, 50/60 Hz power supply and normal inverse IDMT curve.
KIR310/710V	带240V交流，50/60Hz电源和甚反时限IDMT曲线 With 240 V AC, 50/60 Hz power supply and very inverse IDMT curve.
KIR310/710-110	带110V交流， 50/60Hz电源和正常反时限IDMT曲线 With 110 V AC, 50/60 Hz power supply and normal inverse IDMT curve.
KIR310/710V-110	带110V交流，50/60Hz电源和甚反时限IDMT曲线 With 110 V AC, 50/60 Hz power supply and very inverse IDMT curve.

KPR150/650 Reverse Power Relay

KPR150/650 反向功率继电器

产品概述 Product Description

KPR150型继电器为定向控制的定时继电器，用于保护交流发电机免于空转。如果出现空转，并且反向电流超过客户可调整的预置限值以及电流仍执行一个预先确定的延时时，跳闸继电器将启动来断开线路。

The KPR150 relay is a directionally controlled timing relay used to protect AC gener-ators from motoring. When such a condition occurs and the reverse current exceeded the customer adjustable preset limit and the current persists for a predetermined delay time, the trip relay operates to diconnect the circuit.

技术数据 Technical Data

输入 Inrputs	
电压Un Voltage Un	380/440V 交流 380/440V AC
电流In Current In	5A 5A
频率 Frequency	50/60Hz 50Hz/60Hz
过载 Overload	1.2× Un，2× In连续，1.2× Un, 10× In持续3秒钟 1.2× Un, 2× In continuous 1.2× Un, 10× In for 3 sec
输出 Outputs	
类型 Type	切换触头 Changeover contact
额定值 Rating	5A/240V 交流 cos = 1 5A / 240V AC cosφ = 1
设定点 Setpoint	
范围 Range	2%到20% 反向电流 2% to 20% reverse current
延时 Time delay	可调节，从0秒到20秒 Adjustable 0 sec to 20 sec
磁滞 Hysteresis	1% 1%
可重复性 Repeatability	0.5% 0.5%

典型应用图 Typical Application Diagram

KPR150

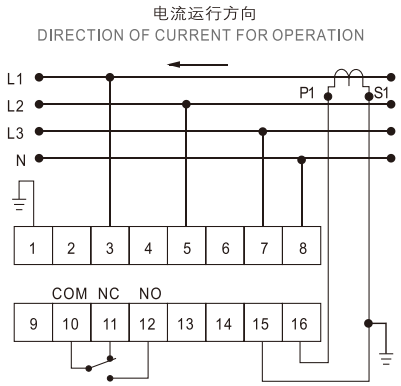

KPR650

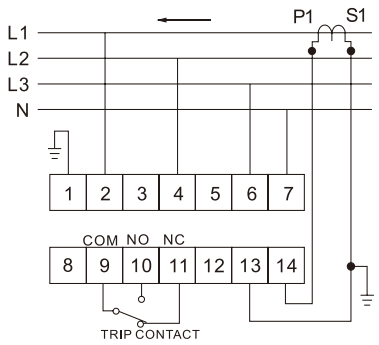

功能Functions

- 反向功率监督
- 3相4线制式
- 反向功率整定值可调节
- 跳闸延时可调节
- 安装对应辅助电源，跳闸继电器和跳闸状态的指示灯
- 试验按钮

- Reverse power monitoring
- 3-phase-4-wire system
- Adjustable reverse power setting
- Adjustable tripping time delay
- Indicators for auxiliary power, trip delay and trip status
- Test button

KPR150/650 Reverse Power Relay

KPR150/650 反向功率继电器

正面面板介绍
Front Panel Description
灯光指示器Light Indicators

指示灯 AUX辅助 Indicator AUX	指示灯 DELAY延时 Indicator DELAY	指示灯 TRIP跳闸 Indicator TRIP	状态 Status
关闭 OFF	关闭 OFF	关闭 OFF	无辅助电源 No auxiliary power supply.
接通 ON	关闭 OFF	关闭 OFF	系统正常模式。无跳闸 System normal mode. No tripping.
接通 ON	接通 OFF	关闭 ON	反向电流超过预先设置的极限值。 Reverse current exceeded pre-set limit. 延时倒数计秒开始 Time delay countdown started.
接通 OFF	关闭 ON	接通 ON	系统跳闸 System tripped.

外壳尺寸Case Dimensions

KPR150

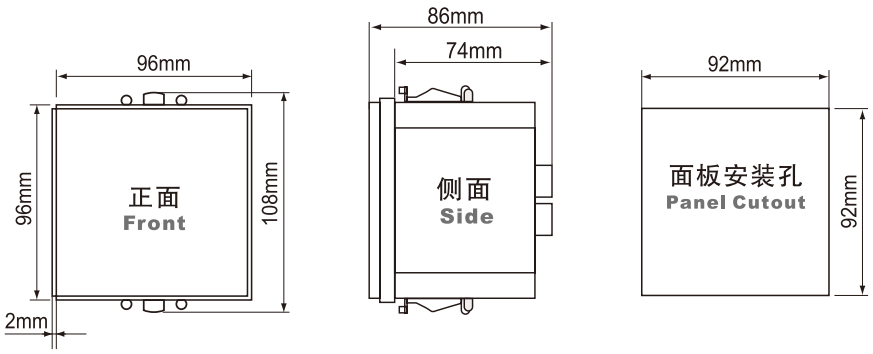

KPR650

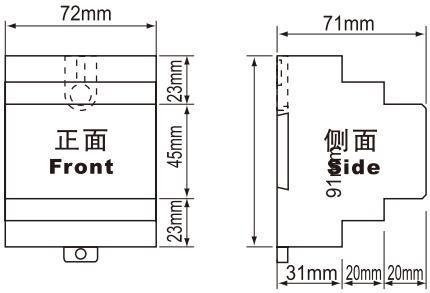

反向电流调节旋钮
Reverse Current Adjustment Knob Test Button

- 用于在跳闸前设定最小反向电流值
- 调节范围，从2%到20%
- For setting the minimum reverse current before tripping
- Setting range from 2% to 20%

延时调节旋钮
Delay Timing Adjustment Knob

- 设定跳闸延时时间
- 调节范围，从0秒到20秒钟
- Trip time delay setting
- Setting range from 0 to 20 sec

试验按钮

- 按下该按钮来仿真一个跳闸状态。
- Press the test button to simulate a trip condition.

复位按钮
Reset Button

- 复位按钮用于在跳闸后复位灯光指示器。
- 复位，应按下复位按钮一次。
- 一旦反向电流小于预先设定的限值，跳闸触头将释放，不过，跳闸灯光指示器被锁定。按下复位按钮使灯光指示器恢复到正常状态。

- The reset button is for reseting the light indicator after tripping.
- To reset, press the reset button once
- The tripping contact will be released once the reverse current fall below the pre-set limit. However, the TRIP light indicator is latched.Press the reset button to reset the light indicator to normal state.

定购信息Ordering Information

型号 Model	品名 Description
KPR150/650	带415V交流 With 415V AC

KVR560/540/520 3-Phase Voltage Control Relay

KVR560/540/520 3相电压控制继电器

特征 Features

- 电监控继电器
- 3相电电压监控
- 相位故障监控
- 电压限值可调节
- 延时可调节
- 电压故障指示灯
- 电源和输出ON(接通)用指示灯

- Adjustable delay time
- Indicators for voltage fault
- Indicators for power and output ON
- Electronic monitoring relay
- Voltage monitoring for 3-phase system
- Phase failure monitoring
- Adjustable voltage limit

技术数据 Technical Data

电源输入 Power supply input	
相间电压 Phase-to-phase voltage	415V交流±20% 415V AC ± 20%
	400V交流±20% 400V AC ± 20%
	380V交流±20% 380V AC ± 20%
频率范围 Frequency range	45到65Hz 45 to 65 Hz
最大功耗 Max. power consumption	3VA
输入联系 Input contact	相L1，L2，L3分别接到插头1，3，5中线接到插头7 Phase L1, L2, L3 respectively, received a midline received 1,3,5 plug plug 7
整定范围* Setting ranges	
低压限值* Lower voltage limit	78%–98%
高压限值** Upper voltage limit **	102%–122%
延时，T Delay time,	0.1–10秒 T 0.1-10s
磁滞 Hysteresis	
≤有效值的1% ≤1% of rms-value	
触头输出 Contact output	
触头配置 Contact arrangement	单刀双掷, 切换触头 SPDT change-over contacts.
触头容量 Contact rating	5A,250V AC (cos ϕ =1)
触头材料 Contact material	银合金 Silver alloy
操动时间 Operating time	最大15毫秒 15 ms max
预期电寿命 Expected electrical life	在额定电流下为100,000 次操动 100,000 operations at rated current
预期机械寿命 Expected mechanical life	5×10^6 次操动 5×10 tions
认证 Approval	UL/CSA, VDE, TUV, SEMKO
指示灯 Indicators	
电源ON（接通） Power supply ON	绿灯 Green LED
输出ON（接通） Output ON	红灯 Red LED
欠电压限值(U<)* Under voltage limit(U<)*	红灯 Red LED
过电压限值(U>)** Over voltage limit(U>)*	红灯 Red LED
机械 Mechanical	
安装 Mounting	DIN导轨安装、螺丝安装 DIN rail mounted, Screws mounted
近似重量 Applicable Weight	0.25千克 0.25Kg

KVR560/540/520 3-Phase Voltage Control Relay

KVR560/540/520 3相电压控制继电器

产品概述Product Description

KVR560、KVR540和KVR520为3相监控继电器。这些继电器主要用于使电压低于设定的限值。

嵌入式可调节延时能防止出现无故跳闸。

KVR560, KVR540 & KVR520 are 3-phase monitoring relays. The relays are designed for application where it is required to maintain the voltage within set limits. A built-in adjustable time delay prevent nuisance tripping.

接线图Wiring Diagram

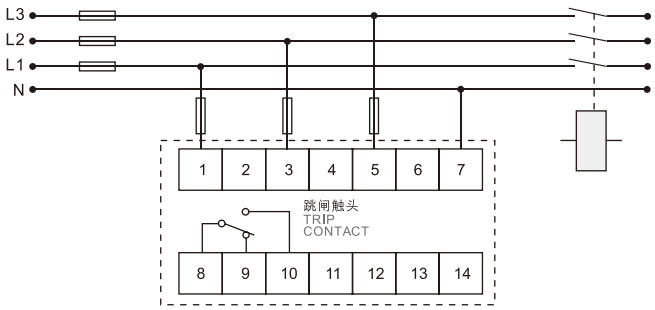

运行图Operations Diagram

过电压性能 Over voltage function

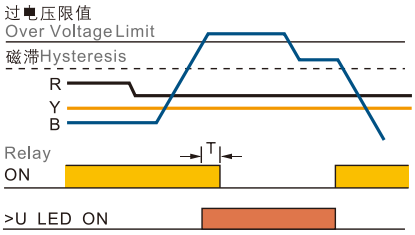

过电压性能 Under voltage function

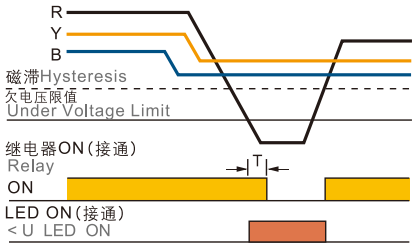

外壳尺寸Case Dimensions

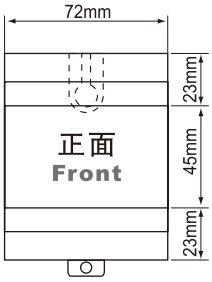

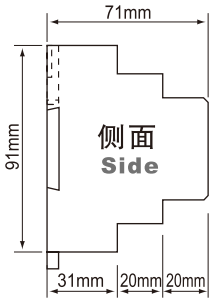

定购信息Ordering Information

型号 Model	功能 Function				
	欠电压监控 Under voltage monitoring		过电压监控 Voer voltage monitoring		电源电压V 交流 Supply voltage V AC
KVR520-380	有	YES	无	NO	380
KVR520-400	有	YES	无	NO	400
KVR520-415	有	YES	无	NO	415
KVR540-380	无	NO	有	YES	380
KVR540-400	无	NO	有	YES	400
KVR540-415	无	NO	有	YES	415
KVR560-380	有	YES	有	YES	380
KVR560-400	有	YES	有	YES	400
KVR560-415	有	YES	有	YES	415

KVR 510/500 3-Phase Voltage Sequence/Failure Control Relay

KVR510/500 3相电压相序/相位故障控制继电器

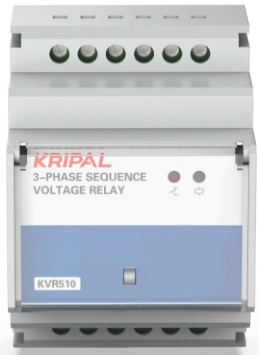

概 述 Description

本相序和相位故障继电器用于需要持续监控3相电源的相序和相位是否正确的场合。通常用来保护3相电机。

This phase sequence and phase failure relay is designed for opplication where the 3-phase supply needs to be continuously monitored for propersequencing and phase loss.
Commonly used to protect a 3-phase motor.

技术数据 Technical Data

电源输入 Power supply input	
相间电压 Phase-to-phase voltage	415V交流±15% 415V AC ± 15%
	400V交流±15% 400V AC ± 15%
	380V交流±15% 380V AC ± 15%
	220V交流±15% 220V AC ± 15%
频率范围 Frequency range	45到65Hz 45 to 65 Hz
最大功耗 Max. power consumption	3VA
输入联系 Input contact	相L1接到插头1 Plug a receiving phase L1
	相L2接到插头3 L2 received a three-phase plug
	相L3接到插头5 L3 received a five-phase plug
	中线(选项)接到插头6 Midline (option) received a plug 6
触头输出 Contact output	
触头配置 Contact arrangement	单刀双掷, 切换触头 SPDT change-over contacts.
触头容量 Contact rating	5A,250V AC (cos ϕ =1)
触头材料 Contact material	银合金 Silver alloy
预期电寿命 Expected electrical life	在额定电流下为100,000 次操动 100,000 operations at rated current
预期机械寿命 Expected mechanical life	5×10^6 次操动 5×10 tions
认证 Approval	UL/CSA, VDE, TUV, SEMKO
指示灯 Indicators	
电源ON（接通） Power supply ON	绿灯 Green LED
输出ON（接通） Output ON	红灯 Red LED
机械 Mechanical	
安装 Mounting	DIN导轨安装、螺丝安装 DIN rail mounted, Screws mounted
近似重量 Applicable Weight	0.25千克 0.25Kg

特征 Features

- 电监控继电器 — Electronic monitoring relay
- 相序监控* — Phasese quence monitoring*
- 相位故障监控 — Phase failure monitoring
- 插头类型模块 — Plug-in type module
- 延时可调节 — Adjustable delay
- 电源和报警状态指示灯 — Indicators for power and alarm status

*只适用KVR510型号
*Applicable to KVR510 model only

KVR 510/500 3-Phase Voltage Sequence/Failure Control Relay

KVR510/500 3相电压相序/相位故障控制继电器

功能表 Function Table

状况 Condition	插头1 Pin 1	插头3 Pin 3	插头5 Pin 5	继电器 Relay	备注 Remark
1	L1	L2	L3	接通 ON	系统正常 System healthy
2	空/Loss	L2	L3	断开 OFF	相位故障 Phase failure
3	L1	空/Loss	L3	断开 OFF	相位故障 Phase failure
4	L1	L2	空/Loss	断开 OFF	相位故障 Phase failure
5	L2	L1	L3	断开 OFF	相序故障 System healthy*
6	L3	L2	L1	断开 OFF	相序故障 System healthy*

接线图 Wiring Diagram

示例1Example 1

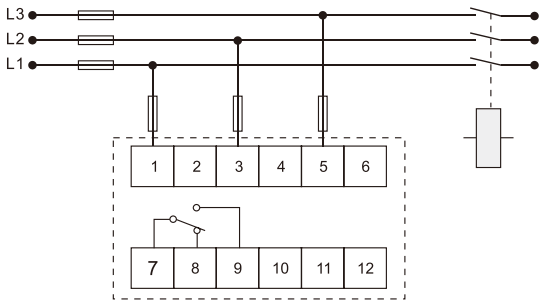

示例2Example 2

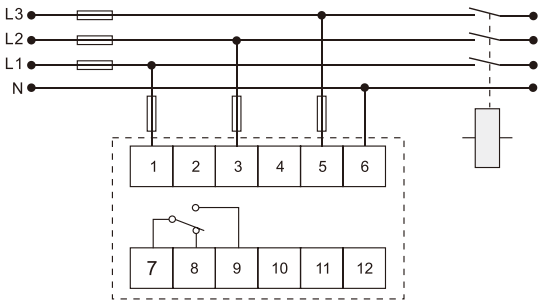

外壳尺寸Case Dimensions

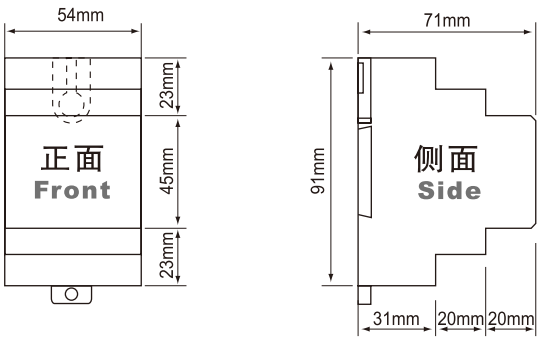

定购信息 Ordering Information

型号 Model	品名 Description
KVR510-220	带220V交流电源 With 220V AC supply
KVR510-380	带380V交流电源 With 380V AC supply
KVR510-400	带400V交流电源 With 400V AC supply
KVR510-415	带415V交流电源 With 415V AC supply
KVR500-220	带220V交流电源 With 220V AC supply
KVR500-380	带380V交流电源 With 380V AC supply
KVR500-400	带400V交流电源 With 400V AC supply
KVR500-415	带415V交流电源 With 415V AC supply

KRIPAL 科瑞普电气

Foreign Trade Department
Add: Zhongfang Intelligent Industrial Park, Beibaixiang Town,
Yueqing City, Zhejiang Province
Tel:+86-577-62865155 62865157
E-mail: tiemin@kripal.com
Web: www.kripal.com

中国市场部
地址：浙江乐清市北白象镇中方智能工业园
电话：0577-55770828 55770339
邮编：325603
电邮：tiemin@kripal.com
网址：www.kripal.com

请扫描二维码
添加公众号

生态纸印刷

- 为了您的安全，在操作前仔细阅读该用户手册。
- 如需检查，修理，或调整请与最近的授权服务联系。
- 当您需要维修请联系一名合格的服务技术员。
  不要擅自拆卸或修理！
- 任何维修和检查应当由具有专门知识的人员处理。

Safety instructions
安全指示

- For your safety,please read manual thoroughly before operating.
- Contact the nearest authorized service facility for check, maintainance or adjustment.
- Please contact a qualified technician when you need maintenance.
- Any maintenance and inspection shall be performed by competent person.

Edition: KRIPAL Planning department Issued:03.2023